EMC® Smarts®
Optical Transport Manager

Version 9.6

User Guide

EMC²

Copyright © 2004 - 2019 EMC Corporation. All rights reserved. Published in the USA.

Published January 2019

Dell believes the information in this publication is accurate as of its publication date. The information is subject to change without notice.

The information in this publication is provided as is. Dell makes no representations or warranties of any kind with respect to the information in this publication, and specifically disclaims implied warranties of merchantability or fitness for a particular purpose. Use, copying, and distribution of any Dell software described in this publication requires an applicable software license.

Dell, EMC, and other trademarks are registered trademarks or trademarks of Dell Inc. or its subsidiaries in the United States and other countries. All other trademarks used herein are the property of their respective owners.

For the most up-to-date regulatory document for your product line, go to EMC Online Support (https://support.emc.com).

CONTENTS

Contents

Chapter 1 Overview

About the Optical Transport Manager 8
EMC Smarts Optical Transport Manager architecture 8
EMC Smarts Optical Transport Manager components 14
Topology Server 14
Analysis Server 15
OTM Adapters 17
XD Manager OTM to IP 18
Global Manager 18
Global Console 18
Summary of features of Optical Transport Manager 19
Optical Transport Manager for SONET/SDH 19
Optical Transport Manager for PDH 20
Optical Transport Manager for WDM 21
WDM to SONET/SDH cross-domain correlation 22
PDH to SONET/SDH cross-domain correlation 23
Inter-system connectivity resilience 23
Using the Global Console 24
Map Browser view 24

Chapter 2 Classes and Relationships for SONET/SDH

Optical Transport Manager analysis 28
SONET/SDH object classes in Optical Transport Manager 29
Physical object classes and their relationships 30
Logical connection classes and their relationships 33
Physical topology 35

Chapter 3 Classes and Relationships for PDH

Optical Transport Manager analysis 38
PDH object classes in Optical Transport Manager 38
Physical object classes and their relationships 39
Logical object classes and their relationships 41
Physical topology 42

Chapter 4 Classes and Relationships for WDM

About the Optical Transport Manager WDM model 46
Support for Multiplexing and Demultiplexing in the same circuit pack 47
WDM Object Classes in Optical Transport Manager 48
Classes that represent equipment 50
Facility class 51
OpticalNetworkElement class 51
Card classes 51
Port classes 57
Physical and logical connection classes 58

Abstract entities 62

Chapter 5 Classes and Relationships for WDM-NG

About the Next Generation WDM model 66
Next Generation WDM object classes in Optical Transport Manager 66

Chapter 6 Notifications and Impacts for SONET/SDH Networks

About Optical Transport Manager notifications 70
Notifications and symptomatic events 70
Root-cause problems for SONET/SDH network elements 71
Root-cause problems for SONET/SDH network connections 72
Diagnosis of external failure 73
Impact analysis 74
Impact correlation 74
Impact notifications 75

Chapter 7 Notifications and Impacts for PDH Networks

About Optical Transport Manager for PDH notifications 78
Notifications and symptomatic events 78
Root-cause problems for PDH network elements 79
Root-cause problems for PDH network connections 80
Diagnosis of external failure 80
Impact analysis 81
Impact correlation 81
Impact notifications 81

Chapter 8 Notifications and Impacts for WDM Networks

Optical Transport Manager analysis for WDM networks 84
Root-cause notifications for WDM Manager 84
Impact analysis 85
Impact correlation 86
Impact notification 87
Cross-domain correlation 88

Chapter 9 Notifications and Impacts for Next Generation WDM Networks

Optical Transport Manager analysis for Next Generation WDM networks 90
Notifications and symptomatic events 90
Root cause events for WDM-NG Manager 92

Chapter 10 Protection Schemes

Protection switching support 96
The AtRisk Notification 96
1+1 automatic protection switching 97
1:N protection 98
1+1 protection 100
2-fiber BLSR/MS-SPRing protection 101
4-fiber BLSR/MS-SPRing protection 103
UPSR/SNCP protection 105
1+1 ClientCircuit/TopologicalLink Protection 106
SNC (Subnetwork connection) protection: 110

Y-Cable protection 110

Appendix A Abbreviations and Acronyms

Appendix B User-Defined Attributes in Notifications

User-defined attributes for SONET/SDH Circuits and Trails 114
User-defined attributes for Low Order SONET/SDH Circuits and Trails..... 114
User-defined fields for OpticalNetworkElement 115

Appendix C Naming Conventions for Object Classes

Generic naming convention 118
Optical Transport Manager for SONET/SDH class names..... 119
Optical Transport Manager for WDM class names 119

Index

CHAPTER 1
Overview

The EMC Smarts Optical Transport Manager provides root cause and impact analysis for network services using optical fiber transport networks.

Topic covered in this chapter are:

- About the Optical Transport Manager 8
- EMC Smarts Optical Transport Manager architecture 8
- EMC Smarts Optical Transport Manager components 14
- Summary of features of Optical Transport Manager 19
- Using the Global Console 24

About the Optical Transport Manager

The Optical Transport Manager includes the following components:

- Optical Transport Manager

  Optical Transport Manager consists of four domain managers: SONET/SDH, WDM, low Order SONET/SDH (also referred to as PDH), and the Next Generation WDM (WDM-NG) server. The first three domain servers are split into two functional servers: Topology and Analysis. The WDM-NG server works with EMC M&R to collect data from EMS systems that support TMF 864. Both topology and analysis functions are combined in the WDM-NG server.

- XD Manager OTM to IP

  The XD Manager OTM to IP cross-correlates root-cause and impact analysis between a managed optical domain and the IP network. The XD Manager OTM to IP is described in the *EMC Smarts XD Manager for OTM to IP User Guide*.

Other required products

In addition, the EMC Smarts Optical Transport Manager works in conjunction with the following:

- EMC Smarts Service Assurance Manager
  - Global Manager
  - Global Consoles
- EMC M&R (when the OTM WDM-NG domain manager is installed)
  - SolutionPack for Optical Wavelength Services
  - SolutionPack for EMC Smarts

These are provided in a separate download and have their own documentation.

EMC Smarts Optical Transport Manager architecture

Figure 1 on page 9 shows how the Optical Transport Manager relates to the Service Assurance Manager, adapters, and the optical network.

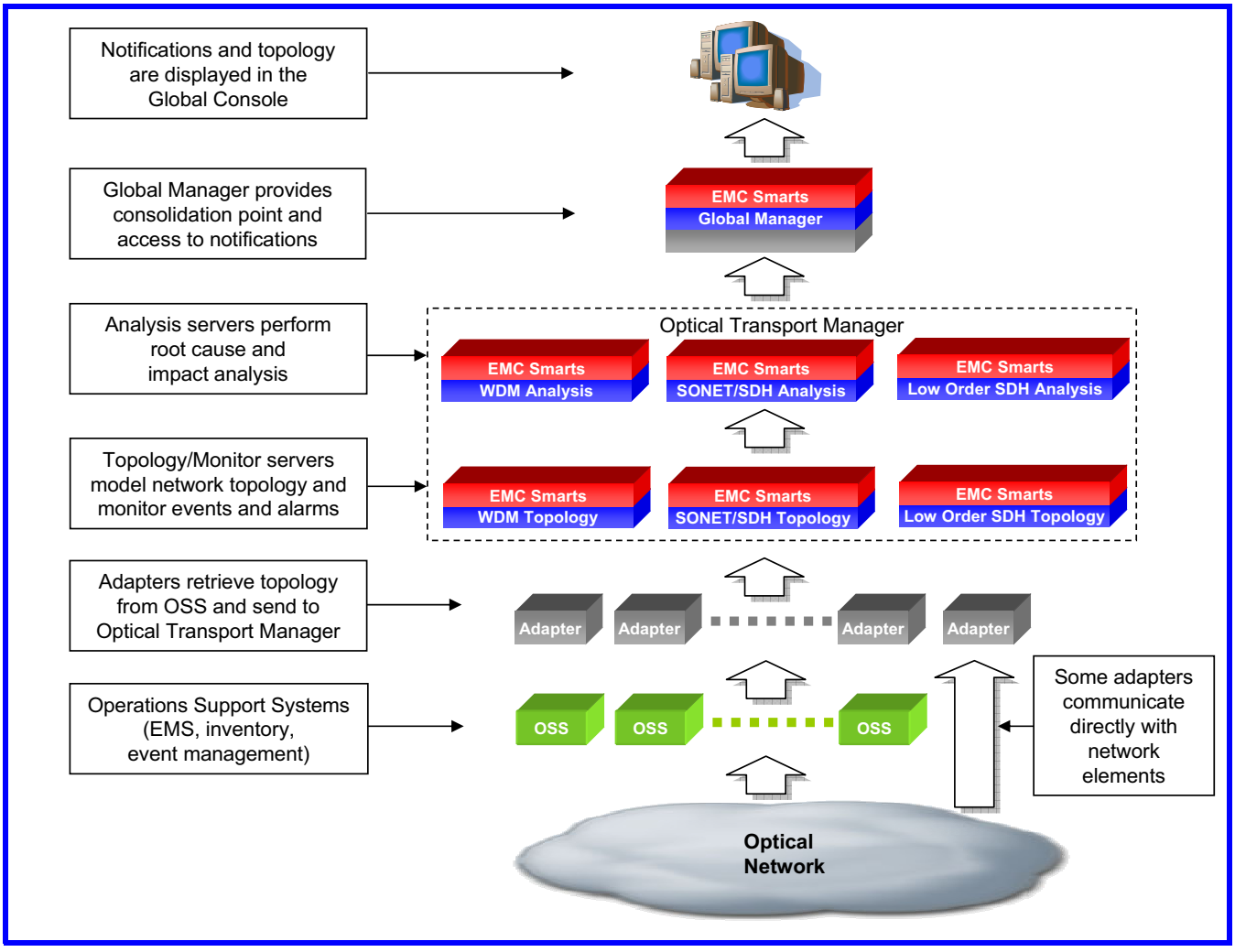

Figure 1 EMC Smarts Optical Transport Manager Architecture

Note: Figure 1 on page 9 does not show the interaction among the OTM servers and the domains. It does not show the XD Manager OTM to IP server or the WDM-NG domain manager. Figure 2 on page 12 shows the architecture when EMC M&R and the WDM-NG domain manager are installed with the SolutionPack for Optical Wavelength Services.

The components of the Optical Transport Management functionality are listed in Table 1 on page 10. Components and functionality are discussed in more detail in the following sections.

Table 1 Components of the Optical Transport Manager

Category	Component	Description
Optical Transport Manager	Optical Transport Manager for SONET/SDH Topology Server	• Receives topology from Inventory Adapters. • Maintains repository, monitors status and events for high-order SONET and SDH components in the underlying network. • Communicates with PDH and WDM Topology Servers for cross-domain root-cause analysis. • Receives real-time events from Device and Event Adapters and passes them to SONET/ SDH Analysis Server.
	Optical Transport Manager for PDH Topology Server	• Receives topology from Inventory Adapters. • Maintains repository, monitors status and events for low-order SONET and SDH components in the underlying network. • Communicates with SONET/SDH Topology Server for cross-domain root-cause analysis. • Receives real-time events from Device and Event Adapters and passes them to PDH Analysis Server.
	Optical Transport Manager for WDM Topology Server	• Receives topology from Inventory Adapters. • Maintains repository, monitors status and events for WDM components in the underlying network. • Communicates with SONET/SDH Topology Server for cross-domain root-cause analysis. • Receives real-time events from Device and Event Adapters and passes them to WDM Analysis Server.
	Optical Transport Manager for WDM-NG Server	• Receives topology and events collected from TMF 864-compliant EMC systems. Requires installation of the EMC M&R platform , the SolutionPack for Optical Wavelength Services ,and the SolutionPack for EMC SMarts. • Passes notifications to the SolutionPack for EMC Smarts for display in the EMC M&R user interface. **Note:** The *SolutionPack for Optical Wavelength Services Summary Sheet* article provides more information.
	Optical Transport Manager for SONET/ SDH Analysis Server	• Contain high-order SONET/SDH topology information, objects, their attributes, and relationships needed for analysis. • Receives events and alarms from SONET/SDH Topology Server. • Responsible for carrying out root-cause analysis within the SONET/SDH domain as well as across different OTM domains. • Communicates with SAM for display.
	Optical Transport Manager for PDH Analysis Server	• Contain low-order SONET/SDH topology information, objects, their attributes, and relationships needed for analysis. • Receives events and alarms from PDH Topology Server. • Responsible for carrying out root-cause analysis within the PDH domain as well as across different OTM domains. • Communicates with SAM for display.
	Optical Transport Manager for WDM Analysis Server	• Contain WDM topology information, objects, their attributes, and relationships needed for analysis. • Receives events and alarms from WDM Topology Server. • Responsible for carrying out root-cause analysis within the WDM domain as well as across different OTM domains. • Communicates with SAM for display.

Table 1 Components of the Optical Transport Manager (continued)

Category	Component	Description
Cross-Domain Correlation	XD Manager OTM to IP Analysis Server	• Topology contains a subset of objects from OTM and IP managed domains. • Cross-correlates events between managed optical domain and the IP network. • Performs root-cause and impact analysis across domains.
Adapters (see note below)	Inventory Adapter	• Retrieves physical and logical topology information from an element management system (EMS) in the Operations Support System (OSS) environment or from a database or flat file. • May extract data from multiple inventory systems, each with its own adapter, to derive a complete end-to-end model.
	Event Adapter	• Retrieves alarm data from a system in the OSS environment. • May provide some level of normalization of alarms among equipment from different vendors. • Several event adapters may be required in order to gather all of the alarms from the network.
	Device Adapter	• Communicates directly with specified devices (as opposed to communicating through an EMS) to retrieve topology and alarm information. • Usually, a device adapter supports a small range of models from one vendor.
Consolidation and Presentation	Global Manager (Service Assurance Manager)	• The Global Manager provides a consolidation function for root-cause and impact notifications that are created as a result of analysis by underlying Domain Managers. • A third-party system can use the Global Manager as a single integration point to retrieve all notifications in a set of distributed Domain Managers that may be managing different geographical or technology domains.
	Global Console	• The Global Console is the graphical user interface that provides users with the ability to navigate the topology of physical and logical entities in the network. • View notifications from underlying managers using filters that match users' roles.

Note: The adapters deployed depend on the specific sources of topology and alarm data present in the environment. These can be a combination of element managers, OSSs deployed, and the devices themselves.

Figure 2 on page 12 shows the flow of data when the WDM-NG domain manager is installed. This OTM manager can process events coming from TMF 864-compliant EMS systems by using the EMC M&R platform with two SolutionPacks installed (SolutionPack for Optical Wavelength Services and the SolutionPack for EMC Smarts)

Figure 3 on page 13 shows the high-level view of the flow of data among the non-WDM-NG components when EMC M&R is not deployed in your network.

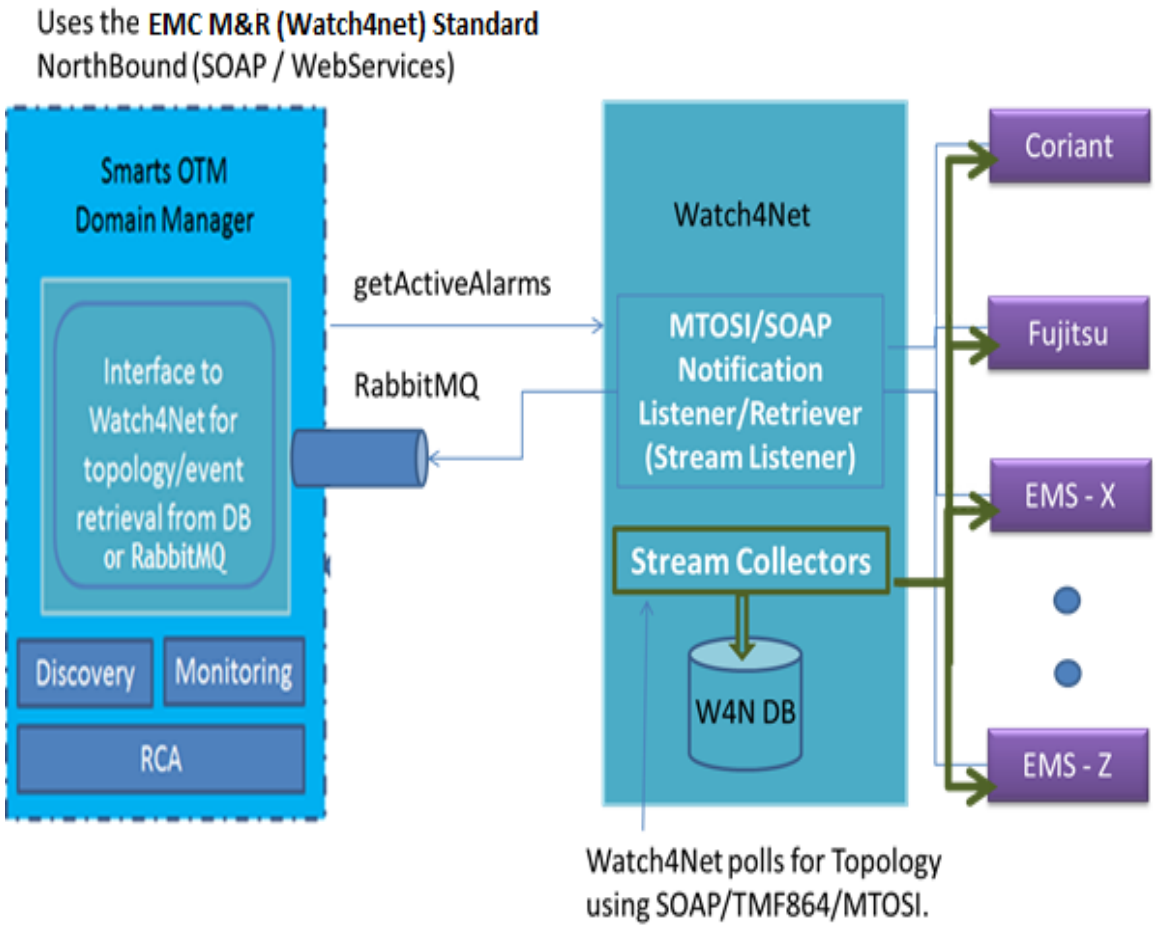

Figure 2 Data flow in EMC Smarts Optical Transport Manager with WDM-NG domain manager, EMC M&R, and the SolutionPack for Optical Wavelength Services installed.

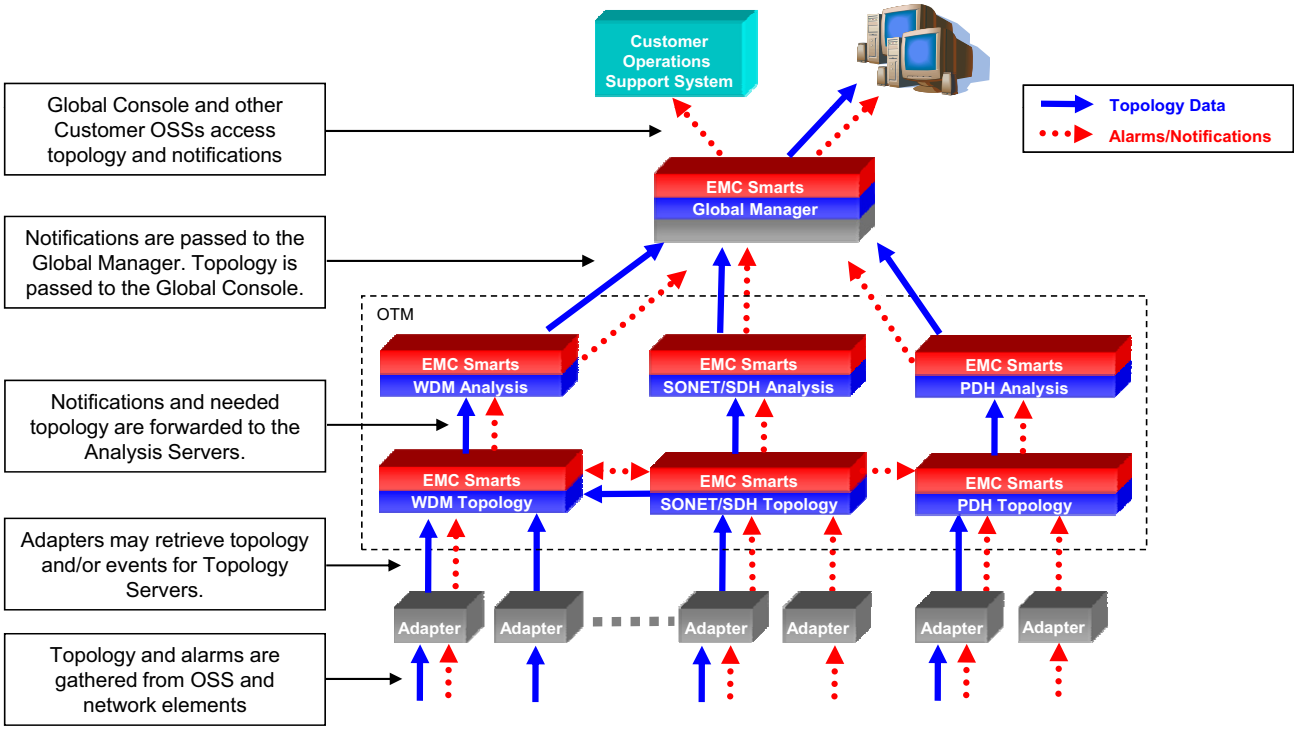

Figure 3 Data flows in EMC Smarts Optical Transport Manager with WDM, Sonet/SDH, and PDH

There are three types of adapters.

- Inventory Adapters gather topology data from OSSs and/or from network elements.
- Event Adapters gather alarm data from OSSs and/or from network elements.
- Device Adapters (not shown in Figure 3 on page 13) may supply data directly to one or more of the Optical Transport Manager Domain Manager Topology Servers.

OTM uses SDXA (Simple Data Exchange Adaptor) for topology transfer from a Topology Server to the Analysis Server within the same OTM domain.

The Optical Transport Manager for SONET/SDH shares some topology and alarm data with the Optical Transport Manager for WDM and the Optical Transport Manager for PDH in order to enable them to perform cross-domain correlation.

Information is propagated between Topology Servers of different OTM domains (for example, from a SONET/SDH Topology server to a PDH Topology server) using Remote Accessor Instrumentation to perform cross-domain root-cause analysis.

Each Analysis Server sends notifications to the Global Manager, which acts as a consolidation point. The Global Console and other customer operations support systems retrieve notifications from the Global Manager and topology from the Analysis Servers.

EMC Smarts Optical Transport Manager components

The term *Optical Transport Manager* is used when referring to functionality that is common to the Domain Managers:

- Optical Transport Manager for SONET/SDH
- Optical Transport Manager for PDH (low order SONET/SDH)
- Optical Transport Manager for WDM
- Optical Transport Manager for WM-NG

The functions of SONET/SDH, PDH, and WDM Domain Managers are divided between two servers:

- Topology Server
- Analysis Server

Note: Currently only one Topology Server with one Analysis Server is supported for SONET/SDH, PDH, and WDM. Splitting these functions allows the OTM Domain Servers to improve scalability to larger optical networks.

The topology and analysis functions are combined in the WDM-NG server. WDM-NG works with the SolutionPack for Optical Wavelength Services and the EMC M&R platform to collect data from EMS systems that support TMF 864. The S*olutionPack for Optical Wavelength Services Summary Sheet* article provides more information.

In addition to the Domain Managers, EMC Smarts Optical Transport Manager works in conjunction with:

- XD Manager OTM to IP
- Global Manager and Global Console, both part of the EMC Smarts Service Assurance Manager.
- EMC M&R, the SolutionPacks for Optical Wavelength Services, and the SolutionPack for EMC Smarts

This section describes in more detail the functions of the various components of EMC Smarts Optical Transport Manager.

Topology Server

The Optical Transport Manager Topology Servers provide these major functions for their domains:

- Model support for optical networks
- Discovery of network topology
- Notification reporting

These functions are described in the following sections.

Optical transport model

The Topology Server discovers and maintains a comprehensive and accurate repository of the devices, physical connections, logical connections, and protection groups that are present in an optical network. The information is obtained by collecting bulk data and events from EMSs and other OSSs such as inventory managers, adapters, databases, and flat files.

Every Topology Server contains an object model definition for the technology domain that it is managing. EMC Smarts object models are defined using the EMC Smarts Common Information Model (ICIM). The *EMC Smarts ICIM Reference* found at BASEDIR/doc/html/icim/index.html provides more information.

The data model defines a class hierarchy and the properties, relationships (associations), and observable events (exceptional conditions) for each class. The model captures the alarm-reporting mechanism of optical networks including root-cause alarms such as LOS (Loss of Signal) and LOF (Loss of Frame), and indication alarms such as AIS (Alarm Indication Signal) and RDI (Remote Defect Indication).

Discovery

When a topology adapter is run, it creates topology from the OSSs for the Topology Server. Topology information contains both physical and logical inventory. Physical inventory can include the devices themselves, the network element, the equipment installed in those network elements, and the ports and interfaces contained in the equipment, and the physical connections. Logical inventory includes the applications, protocols, and logical connections.

During discovery, the adapter information creates the Topology Server repository by creating instances of the objects specified in the model, and by creating relationships between the objects. When discovery is complete, the repository contains a representation of the components of the network and how they are connected.

For technical or administrative reasons, some devices cannot be discovered. If needed, unmanaged entities can be introduced into the topology by means of a specially designed inventory adapter that uses an API, a flat file, XML or a database to create a “black box” object. A black box may consist of one or more contiguous devices or entities, sometimes called a “black box cloud”.

Notification reporting

Event adapters monitor their part of the network for problems and indicate when an event state has changed. All real-time event and alarm updates from various events and alarms monitoring systems are fed to the Topology Server by one or more adapters. They are passed to the Analysis Server for root-cause analysis.

Analysis Server

The Optical Transport Manager Analysis Servers provide these major functions for their domains:

- Model support for optical networks
- Root-cause analysis

- Impact analysis

These functions are described in the following sections.

Optical transport model

The Analysis Server has its own model and repository. This model contains all the object, attributes and relationships (associations) necessary for each class. The model captures the alarm-reporting mechanism of optical networks for discovering root-cause problems and the causality between a root-cause problem and the observable events (exceptional conditions) it causes.

The model is used to populate the Codebook that is used to diagnose root-cause problems given a set of alarm conditions.

Root-cause analysis

The Analysis Server performs root-cause and impact analysis within its specific OTM domain. It uses the EMC Smarts patented Correlation Codebook Technology (CCT). The codebook contains an entry for each problem that can occur on each modeled object, together with the symptomatic events that result when that problem occurs. This unique list of symptoms is called the problem signature.

After initial discovery, and following topology updates to the repository, the codebook entries for the possible problems in the network are calculated by applying the problem definitions in the model to the actual network topology that has been discovered. This pre-calculation of problem signatures allows the Optical Transport Manager to quickly and accurately diagnose the root-cause problems in the network, using the currently active alarm conditions as input. When problems have overlapping signatures, the codebook algorithm proposes a set of most likely problems together with the probability that each one is a root cause. The Analysis Server compares the current event state of the network against the codebook at a user-configurable rate.

Equipment in optical networks is comprehensively instrumented in order to detect when a failure occurs, and to inform other network elements that a problem has occurred. This information is forwarded to management systems in the form of alarms.

A single fault in an optical network can result in many alarms being generated at different layers, such as section/regen, line/multiplexer, or path. Many of these alarms appear at points distant from the source of the problem. Using codebook correlation to perform root-cause analysis, the Optical Transport Manager Analysis Server identifies some of these alarms as symptomatic events of a root-cause problem, while it identifies other events as impacted by a root-cause problem.

Impact analysis

Impact analysis has two components:

- Impact correlation
- Impact notification

Impact correlation is the process by which alarm conditions are identified as being explained by a root cause. For example, a line failure in SONET/SDH may cause many path-level alarms. The Optical Transport Manager Analysis Server identifies events corresponding to these alarms as impacts of the underlying root cause.

Impact notification identifies those end-to-end circuits that are affected when underlying connections are down. There are no network alarms directly associated with the end-to-end connections that would otherwise indicate their operational status.

OTM Adapters

The Optical Transport Manager works in conjunction with the following types of adapters, which may be implemented in some deployments:

- Inventory adapters
- Event adapters
- Device adapters

Adapters are custom-built for the specific brand of equipment, type of device, and deployment environment of the client. They can be purchased separately from EMC, created by the client, created by the Custom Engineering (CE) group at EMC, or by a third-party developer.

Inventory adapters

Inventory adapters (also known as topology adapters) gather topology data from an inventory system that is part of the OSS environment in an optical-based service provider or enterprise. Depending on operator environment, the inventory system might provide a complete inventory of devices, including physical and logical connections; or it might provide a subset of topology data that describes the links between devices that are managed by different element managers, and/or end-to-end circuits that can pass over multiple vendor devices. The output of the Inventory adapter gets read by the Topology Server.

Inventory adapters can be implemented that collect topology data from a variety of sources including: flat file, XML, database, and API. Inventory adapters can support bulk loading, scoped loading, and inventory update events.

Event adapters

Event adapters acquire alarms from network devices, element managers, or other OSS systems, map the data into the EMC Smarts format, and send it to a Topology Server that forwards it to the Analysis Server. Event adapters can acquire alarms in real time and/or periodically.

Event adapters can be implemented to support a variety of alarm sources including: flat file, XML, database, and API. Event adapters can support bulk loading, scoped loading, and events.

Device adapters

Device adapters communicate directly with specific devices to retrieve topology and alarm information. No EMS is needed for a device adapter--the adapter translates topology and event messages into a format that a Inventory Adapter can understand.

Usually, a device adapter supports a small range of models from one vendor.

OTM Adapter for TMF 814

The EMC Smarts Optical Transport Manager Adapter for TMF 814 is available to interface with High order SONET/SDH devices monitored by Ciena Lightworks On-Center or Cisco Transport Manager (CTM). These EMSs monitor transport I/O cards (such as OCx/STMx, DSx, or Ethernet) and cross-connect switch cards. The OTM Adapter for TMF 814 makes the EMS data available for OTM for notification and root cause analysis.

The adapter can be configured to run as an Event adapter or as both an event and Topology adapter.

The *EMC Smarts Optical Transport Manager Adapter for TMF 814 User Guide* provides functional details and the *EMC Smarts Installation Guide for SAM, IP, ESM, MPLS, VoIP, OTM, and NPM Managers* provides installation and configuration details.

XD Manager OTM to IP

The XD Manager OTM to IP correlates failures between the underlying optical network domain and the IP network domain. When a failure in the optical network impacts a device in the IP network, cross-domain correlation identifies both the root cause and the impacted IP facility. The XD Manager OTM to IP collects information from the following sources:

- IP Availability Manager
- Optical Transport Manager SONET/SDH Server for Analysis
- Optical Transport Manager WDM Server for Analysis
- Optical Transport Manager PDH Server for Analysis
- Optical Transport Manager WDM-NG Server (includes both Analysis and Topology)
- A custom cross-domain topology Inventory adapter that provides source mapping for the optical/IP network connections

With this information, the XD Manager OTM to IP creates a cross-domain topology and monitors and correlates alarms regarding changes to elements in the topology. The *EMC Smarts XD Manager for OTM to IP User Guide* provides more information.

Global Manager

The Global Manager is part of EMC Smarts Service Assurance Manager. It consolidates notifications from one or more Optical Transport Manager Domain Managers. The Global Manager also can provide data to a customer's OSS (Operation Support System). It provides access to notifications through the Global Console.

Global Console

The graphical user interface for the Optical Transport Manager is provided by the Global Console. Operators can use the following features of the Global Console:

- Topology Browser---View the objects that model the network and navigate the relationships between objects.
- Map Browser---View a physical map of the major optical objects and the connections between them and other network objects.

- Notification Log---View notifications according to filter criteria that can be configured on any combination of notification attributes, and view the attribute values associated with each object.
- Administrative Console--For users with administrative privileges, the administration console offers configuration options.

The Global Console supports creation of customized console layouts that are tailored to roles in the organization, or to specific users.

The Global Console is described in the *EMC Smarts Service Assurance Manager Operator Guide*.

Summary of features of Optical Transport Manager

The Optical Transport Manager supports the following optical network technologies:

- Optical Transport Manager for SONET/SDH---manages high-order SONET/SDH
- Optical Transport Manager for PDH---manages low-order SONET/SDH
- Optical Transport Manager for WDM---manages WDM networks

In addition, the Optical Transport Managers support WDM to SONET/SDH cross-correlation and SONET/SDH to PDH cross-correlation.

The features supported for each network type are described in the following sections.

Optical Transport Manager for SONET/SDH

For SONET/SDH networks, the Optical Transport Manager supports various network configurations, providing root-cause analysis, impact analysis, and impact notification.

SONET/SDH network configurations

The Optical Transport Manager supports connections over any combination of the following configurations in SONET/SDH networks:

- Singleton device where a subnetwork connection is cross-connected from one port of a network element to another port on the same network element
- Linear chain, including 1+1 protection
- For SONET: Ring, including 2F-BLSR, 4F-BLSR, UPSR
  For SDH: Ring, including 2F-MS-SPRing, 4F-MS-SPRing, SNCP
- Mesh, where subnetwork connections can be rerouted when failures occur

These configurations are described in more detail in "Classes and Relationships for SONET/SDH" on page 27 and "Protection Schemes" on page 95.

SONET/SDH root-cause analysis

The Optical Transport Manager for SONET/SDH identifies the following symptoms to diagnose the root-cause problem:

- Failed or removed card, equipment or circuit pack
- Signal degradation

- Link failure
- OpticalNetworkElement down
- Circuit down
- Circuit at risk

Special analysis is performed for links that connect to devices that are not managed by the Optical Transport Manager. This analysis diagnoses when alarms are due to problems in the connected network rather than in the network managed by the Optical Transport Manager.

"Root-cause problems for SONET/SDH network elements" on page 71 and "Root-cause problems for SONET/SDH network connections" on page 72 provide more information.

SONET/SDH impact correlation

When a failure occurs in an optical network, alarms propagate from the failure points both upstream and downstream at the line and path levels. The impact correlation feature of the Optical Transport Manager identifies these alarms as impacts of the underlying root cause. In large networks, hundreds or even thousands of such impacts may be identified, leaving the few root-cause problems to be more easily tracked and managed through their resolution.

"Impact correlation" on page 74 provides more information.

SONET/SDH impact notification

When a failure occurs in a SONET/SDH network and protection switching is unavailable, all the circuits that depend on the failed element lose connectivity. Since circuits are end-to-end entities that can span devices managed by multiple EMSs, they are not known about at the EMS level.

When the Optical Transport Manager diagnoses problems in any element that is underlying a circuit, it creates a notification for the circuit.

"Impact correlation" on page 74 provides more information.

Optical Transport Manager for PDH

The Optical Transport Manager for PDH provides topology and analysis for low-order SONET/SDH network elements. "PDH" is used to designate the low-order SONET/SDH domain manager because PDH traffic is handled as payload on low-order SONET/SDH network elements. For these network elements, Optical Transport Manager supports a point-to-point network configuration, providing root-cause analysis, impact analysis, and impact notification.

PDH network configurations

The Optical Transport Manager supports point-to-point connections for low-order circuits.

PDH root-cause analysis

The Optical Transport Manager for PDH identifies the following symptoms to diagnose the root-cause problem:

- Failed or removed card, equipment or circuit pack

- Signal degradation
- Link failure
- OpticalNetworkElement down
- Circuit down
- Circuit at risk

Special analysis is performed for links that connect to devices that are not managed by the Optical Transport Manager. This analysis diagnoses when alarms are due to problems in the connected network rather than in the network managed by the Optical Transport Manager.

"Root-cause problems for PDH network elements" on page 77 and "Root-cause problems for PDH network connections" on page 77 provide more information.

PDH impact correlation

When a failure occurs in an optical network, alarms propagate from the failure points both upstream and downstream at the line and path levels. The impact correlation feature of the Optical Transport Manager identifies these alarms as impacts of the underlying root cause. In large networks, hundreds or even thousands of such impacts may be identified, leaving the few root-cause problems to be more easily tracked and managed through their resolution.

"Impact correlation" on page 77 provides more information.

PDH impact notification

When a failure occurs in a PDH (low-order SONET/SDH) network and protection switching is unavailable, all the circuits that depend on the failed element lose connectivity. Since circuits are end-to-end entities that can span devices managed by multiple EMSs, they are not known about at the EMS level.

When the Optical Transport Manager diagnoses problems in a subnetwork connection that is part of a circuit, it creates a notification for the circuit.

"Impact correlation" on page 77 provides more information.

Optical Transport Manager for WDM

For WDM networks, the Optical Transport Manager supports various network configurations, providing root-cause analysis, impact correlation, and impact notification.

WDM network configurations

The Optical Transport Manager supports connections over the linear chain configuration in WDM networks.

"WDM Object Classes in Optical Transport Manager" on page 48 provides more information.

WDM root-cause analysis

The Optical Transport Manager for WDM identifies the following symptoms to diagnose the root-cause problem:

- Card failure (entire card or component on a card)
- Improper card removal
- Line failure between components in a device
- Line failure between devices
- Line degradation
- Automatic power reduction/shutdown
- Port problems such as laser temperature, laser bias, and reflection
- OpticalNetworkElement down

Special analysis is performed for links that connect to devices that are not managed by the Optical Transport Manager. This analysis diagnoses when alarms are due to problems in the connected network rather than in the network managed by the Optical Transport Manager.

"Root-cause notifications for WDM Manager" on page 84 provides more information.

WDM impact correlation

When a failure occurs in a WDM network, alarms can propagate from the failure points both upstream and downstream and also through the OTS, OMS, OCH, and OCN layers. The impact correlation feature of the Optical Transport Manager identifies these alarms as impacts of the underlying root cause. In large networks, hundreds or even thousands of such impacts may be identified, leaving the few root-cause problems to be more easily tracked and managed through their resolution.

"Impact correlation" on page 86 provides more information.

WDM impact notification

The end-to-end connections in WDM networks correspond to the physical links between SONET/SDH devices whose data the WDM network is carrying.When a failure occurs in a WDM network, all of the end-to-end connections that depend on the failed element lose connectivity. The Optical Transport Manager for WDM creates notifications on these end-to-end connections, and uses these notifications to cross-correlate with SONET/SDH failures.

"Impact notification" on page 87 provides more information.

WDM to SONET/SDH cross-domain correlation

Cross-domain correlation is the capability of determining when alarms in one network domain are caused by problems in another. The Optical Transport Manager performs cross-correlation between the WDM and SONET/SDH domains.

Failures in the WDM network cause problems in the SONET/SDH network, and conversely, failures in the SONET/SDH network cause alarms in the WDM network. The Optical Transport Manager correlates alarms in each of the WDM and SONET/SDH domains and identifies which SONET/SDH problems are impacts of underlying WDM problems, and which WDM alarms are explained by SONET/SDH problems.

"Cross-domain correlation" on page 88 provides more information.

PDH to SONET/SDH cross-domain correlation

The Optical Transport Manager performs cross-correlation between the PDH and SONET/SDH domains to determine when alarms in one network domain are caused by problems in another.

Managed objects, for the most part, are populated to either the domain: SDH/SONET for high-order objects or PDH domain for low-order objects. PDH to SONET/SDH cross-domain correlation is made possible by sharing the HighOrder_Trail object in both domains.

HighOrder_Trail has the same class name and instance name in both PDH and SONET/SDH domains. However, the trails in the PDH domain will not have any associated CTPs (that is, a-end, z-end, and CTPsInRoute). The PDH objects will also not have any layering to the SONET/SDH physical objects.

HighOrder_Trail has a one-to-many relationship to the LowOrderCircuits in the PDH domain.

Inter-system connectivity resilience

To ensure inter-system connectivity resilience in the case of failure or loss of communication, the Optical Transport Manager provides the following:

- Buffering of events being sent between components of Optical Transport Manager
- Ability to retrieve northbound alarms that were held after a communications failure
- Ability to retrieve active southbound alarms after connection with an EMS is interrupted
- Ability to switch to a peer EMS instance in the case of failure
- Rediscovery of devices after failure of EMS/device communication

Failure between Optical Transport Manager components

Subscribed-to events are buffered during a loss of communications, and are sent when communications are re-established. For example, notifications sent from an Optical Transport Manager for SONET/SDH Analysis Server to the Global Manager.

Failure between Optical Transport Manager and northbound system (northbound alarms)

Notifications are held in the Optical Transport Manager Analysis servers until acknowledged and cleared. They are archived and removed after a configurable time period (default, four hours). A northbound system is able to retrieve missed alarms (for example, following loss of communications) until the alarms are archived.

Failure between the Optical Transport Manager and southbound system (southbound events)

If the Optical Transport Manager suffers a loss of communication with an EMS, it retrieves all the active alarms on reconnection.

Failure of an EMS instance (southbound EMS connectivity)

Optical Transport Manager EMS adapters can operate in environments where two EMS instances are running in parallel. If the first instance becomes unresponsive, the adapter switches to the other EMS instance.

Failure of an EMS to managed device connection

If the EMS notifies the Optical Transport Manager of a loss of communication with a device, the Optical Transport Manager rediscovers the device following reconnection.

Using the Global Console

When using the Global Console to view notifications, attach to the Global Manager (Service Assurance Manager) configured to receive notifications from one or more of the Optical Transport Manager Analysis Servers.

When using the Global Console to view optical network topology, attach the Global Console to an Optical Transport Manager Topology Server configured to receive.Attaching to the topology server also allows you to use the Map Browser to view the major nodes and connections in a physical map. Objects shown and their relationships are described in “Map Browser view” on page 25.

The configuration appendix to the *EMC Smarts Installation Guide for SAM, IP, ESM, MPLS, NPM, OTM, and VoIP Managers* explains how to configure the names of the servers.

The *EMC Smarts Service Assurance Manager Operator Guide* provides information about the Global Console.

Map Browser view

The Map Browser of the Service Assurance Manager Global Console displays the optical network nodes and physical connections in a graphical view. An example is shown in Figure 4 on page 24:

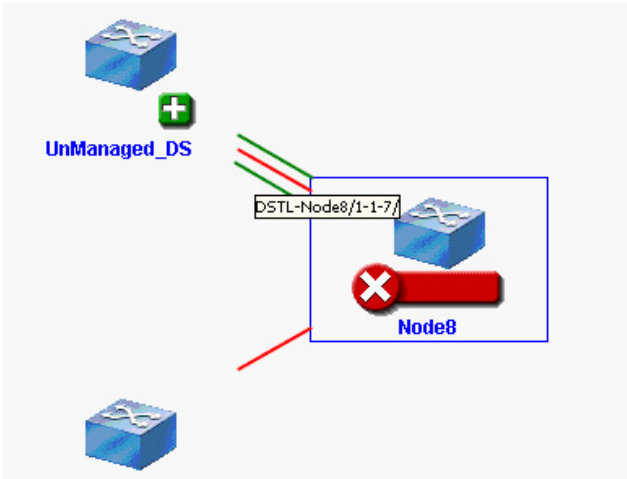

Figure 4 An example of the physical map

For Optical Transport Manager, network nodes are instances of the OpticalNetworkElement class. The physical connections between them are instances of the TopologicalLink class in both high and low order SONET/SDH domains or the FiberLink class in the WDM domain.

The Map Browser graphical representation would be too complex to show every one of the optical network objects. In order to reduce the number of objects that are imported into SAM for display to a manageable number, objects between the OpticalNetworkElement and the TopologicalLink or Fiberlink are not imported to the SAM model and are not displayed.

SONET/SDH and Low Order SONET/SDH domains

In the SONET/SDH domains, the PTP (Physical Termination Point) class will not be shown. Figure 5 on page 25 compares the SONET/SDH model with the SAM model.

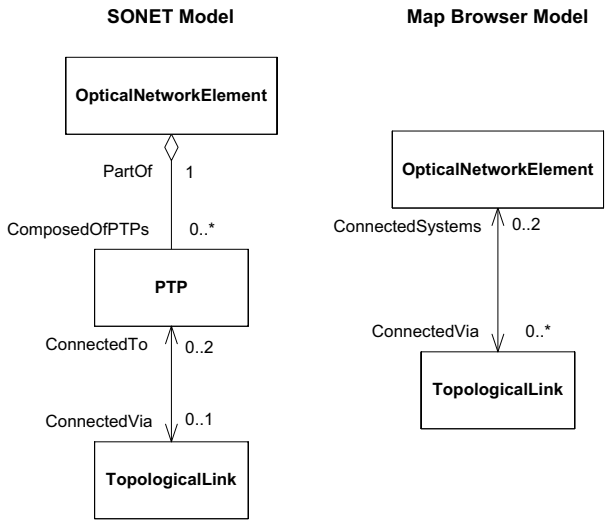

Figure 5 Comparison of SONET model objects with SAM model objects

The DropSideTopologicalLink, with one end connected to the edge of the managed network, is shown in the map similarly to the TopologicalLink, without the PTP between the DropSideTopologicalLink and the OpticalNetworkElement.

Black box devices

The Black Box classes, BBTopologicalLink and BBDropSideTopologicalLink, represent one or more unmanaged network devices. They are shown in the physical map similarly to TopologicalLink and DropSideTopologicalLink objects, without the PTP between them and the managed network object.

WDM domain

In the WDM domain, the Amplifier, Card, Transponder, Port, OutputPort, and InputPort classes will not be shown. Figure 6 on page 26 compares the WDM model with the SAM model.

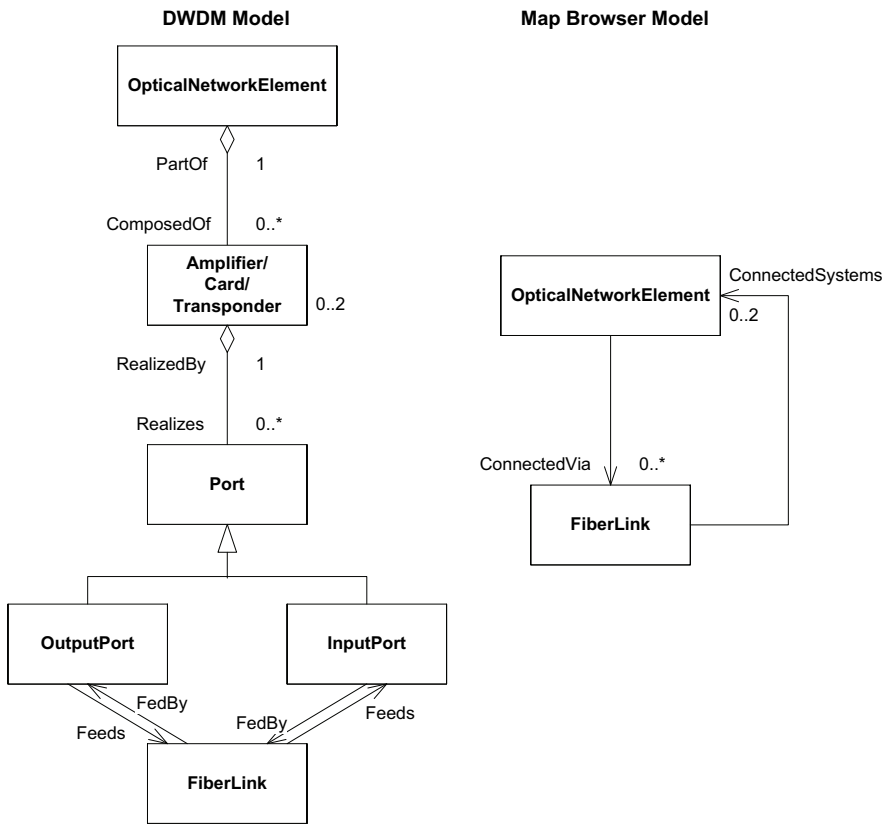

Figure 6 Comparison of WDM model objects with SAM model objects

Black box devices

The Black Box classes, BBTopologicalLink and BBDropSideTopologicalLink, represent one or more unmanaged network devices. They are shown in the physical map similarly to TopologicalLink and DropSideTopologicalLink objects, without the PTP between them and the managed network object.

CHAPTER 2
Classes and Relationships for SONET/SDH

This chapter describes the elements discovered and managed in SONET/SDH networks by the Optical Transport Manager and the problems diagnosed for each element.

Topics covered in this chapter are:

- Optical Transport Manager analysis 28
- SONET/SDH object classes in Optical Transport Manager..... 29

Optical Transport Manager analysis

The Optical Transport Manager for SONET/SDH uses object classes to represent devices and populates them to the repository during discovery. The EMC Smarts repository models the topology of the SONET/SDH network being managed. This topology is used to build the codebook, which is the basis for root-cause analysis.

The SONET/SDH domain includes all of the high-order circuits with “SDH” link paths of VC-3 and AU-4. These are the higher-bandwidth devices with speeds of 34M, 44M and 139M respectively. Low-order devices and protocols are populated to the PDH domain.

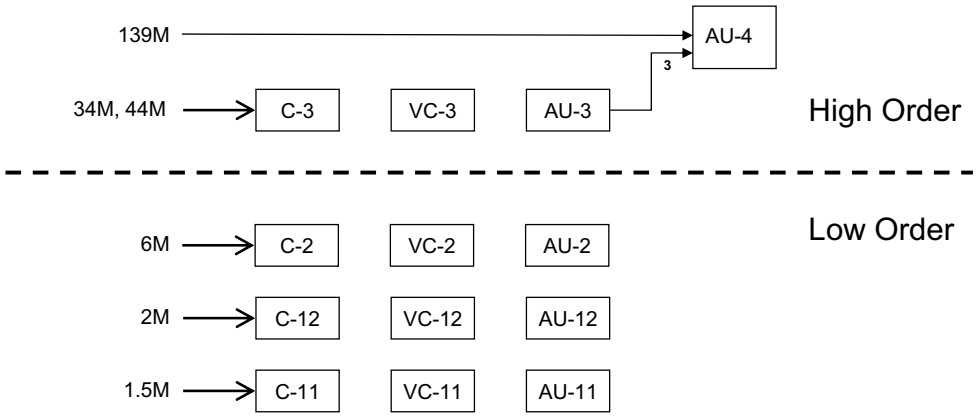

Figure 7 Separation of High-order and Low-order Domains

The Optical Transport Manager for SONET/SDH uses the relationships in the SONET/SDH topology domain and cross-correlates with Optical Transport Manager for PDH to calculate the impact that a root-cause problem in one element has on the elements and services that are connected to, or depend on it.

The Optical Transport Manager calculates which root-cause problems are causing symptom events and creates notifications for the problem origin only. The Optical Transport Manager uses the relationships in the topology to calculate the impact that a root-cause problem in one element has on the elements and services that are connected to, or depend on it.

“Protection Schemes” on page 95 provides information.

SONET/SDH object classes in Optical Transport Manager

Table 2 on page 29 lists the classes in the Optical Transport Manager object model that are visible in the Global Console when it connects to an instance of the Optical Transport Manager. Many of the terms used are derived from the TMF 814 object model.

Table 2 Classes in the Optical Transport Manager object model

Category	Class	Description
Physical Equipment	OpticalNetworkElement	Device supporting SONET/SDH
	Card	Equipment and Card are interchangeable terms. These are physical subsystems that plug into OpticalNetworkElements and support one or more PTPs.
	Equipment	
Ports	PTP	Physical Termination Point. End point of a physical connection.
Physical Connections	TopologicalLink	A physical connection, such as a fiber link, that connects to another device managed by the Optical Transport Manager.
	DropSideTopologicalLink	A physical connection, such as a fiber link, that connects a device managed by the Optical Transport Manager to another device that is not managed by the Optical Transport Manager.
	Conduit	Conduit is an aggregated physical connection consisting of multiple links between a pair of devices managed by Optical Transport Manager.
Abstract Entities	BBTopologicalLink	An unmanaged segment in the between managed entities. May consist of one or more physical or logical devices.
	BBDropSideTopologicalLink	An unmanaged segment on the edge of the managed entities. May consist of one or more physical or logical devices.
Logical Ports	CTP	Connection Termination Point. End point of a logical connection.
Logical Connections	LogicalConnection	A logical connection that crosses part of a subnetwork such as a protection group.
	SubNetworkConnection	A logical connection that crosses a subnetwork.
	MeshSubnetworkConnection	A logical connection that crosses a subnetwork that is in a mesh configuration.
	HighOrder_Trail	A logical connection across a network that may cross one or more subnetworks.
	HighOrder_Circuit	An end-to-end connection across a network that may cross several subnetworks. This entity is used to represent client services.

Table 2 Classes in the Optical Transport Manager object model (continued)

Category	Class	Description
Protection	TopologicalLinkGroup	A group of TopologicalLinks that form some larger entity such as a ring.
	ConnectionProtectionGroup	A group of TopologicalLinks or TopologicalLinkGroups that provide protection for subnetwork connections that cross the protection group. For example, 2F-BLSR ring configuration.
	RingProtectionGroup	A group of TopologicalLinks that form 4F-BLSR/4F-MS-SPRing protection configuration
	LogicalConnectionTPGroup	A group of CTPs that form UPSR/SNCP protection configuration.
	CardProtectionGroup	A group of Cards (or Equipment) where one or more cards backs up a main card.

Physical object classes and their relationships

This section describes the physical object classes used in the Optical Transport Manager for SONET/SDH and the relationships between them that are used to model optical networks.

OpticalNetworkElement, Card, Equipment and PTP classes

Figure 8 on page 30 shows the physical and logical objects modeled by the Optical Transport Manager for SONET/SDH.

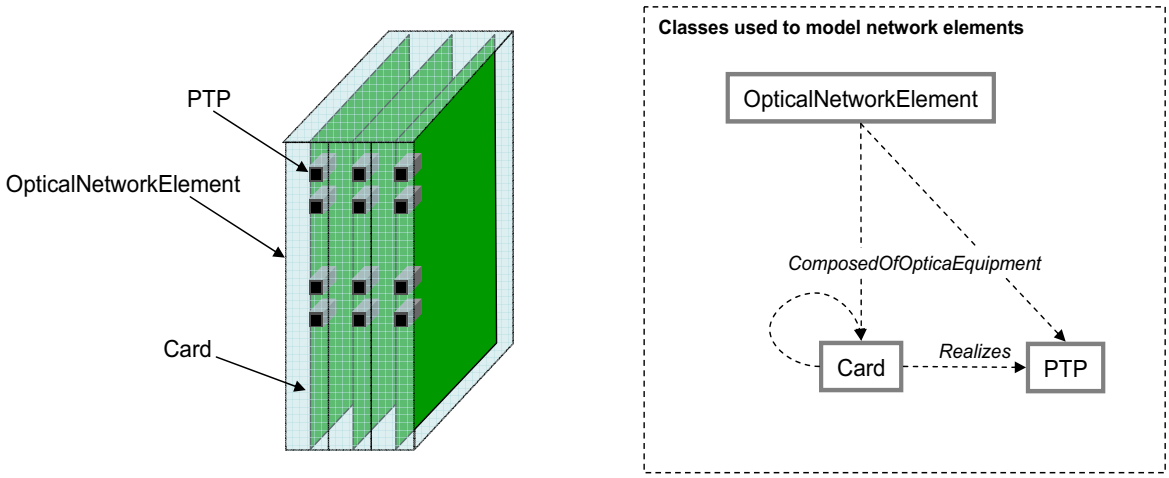

Figure 8 Physical and logical objects modeled by Optical Transport Manager

The top level physical object is an *OpticalNetworkElement* object (network element), which in turn may contain multiple *Card* or *Equipment* objects, which in turn may realize multiple *PTP* (Physical Termination Point) objects.

TopologicalLinks and DropSideTopologicalLink classes

The physical fiber links between network elements are modeled using two types of topological link, depending on whether the Optical Transport Manager manages the network element on one or both ends of the link.

- *DropSideTopologicalLink* is used to model links where the Optical Transport Manager manages only one end of the link.
- *TopologicalLink* is used to model links where the Optical Transport Manager manages both ends of the link.

Figure 9 on page 31 shows the connection between devices and fiber links, which is modeled using a *ConnectedTo* relationship between a *TopologicalLink* and the appropriate *PTP* object in the network element at each end of the link.

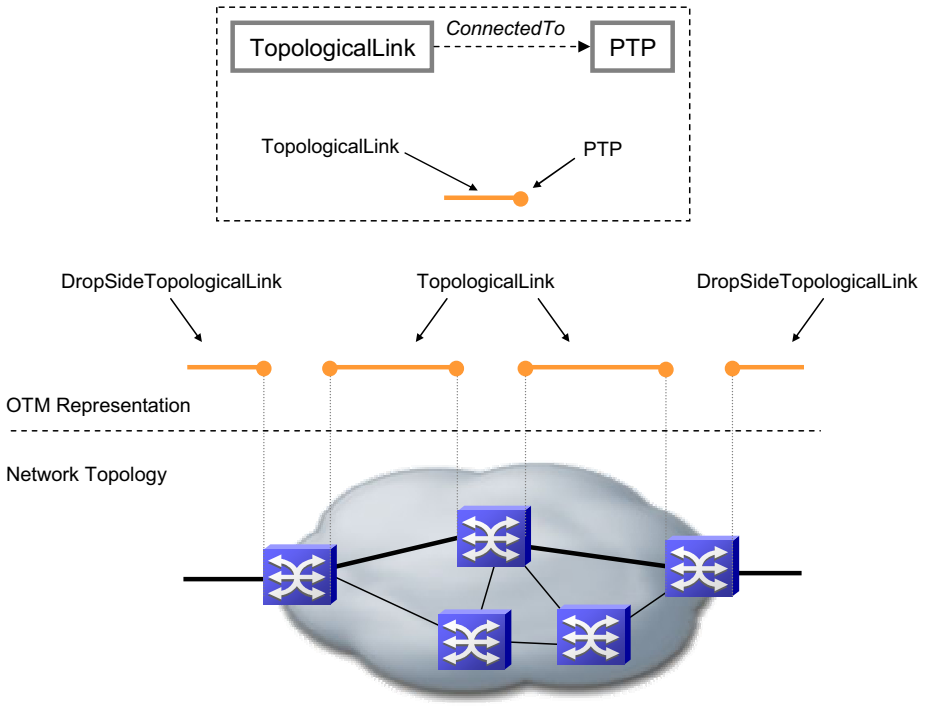

Figure 9 TopologicalLink and DropSideTopologicalLink objects and relationships

The root-cause and impact analysis calculations are slightly different in each of the classes representing topological links. These calculations take account of the fact that some alarms are not received when problems happen on drop-side connections.

Note: The *TopologicalLink* class can be used in the EMC Smarts model to represent uni-directional or bi-directional connections, as appropriate. In the SONET/SDH model, these objects represent a bi-directional connection. For example, each *TopologicalLink* object represents a fiber pair.

Abstract entity “black box” classes

The black box classes allow the topology to show unmanaged segments of the network and to provide root-cause and impact analysis for networks containing the black boxes.

In the case of a black box, entities are not managed for administrative or technical reasons, not due to a network failure. A black box, for example, may be a leased line that you do not manage between network segments that you do manage. It may also be a leased line at the edge of your managed network.

A black box cannot be discovered. It is created using APIs provided with Optical Transport Manager. An API, along with a flat file or database, can create the black box classes.

The black box may be a “black box cloud,” containing multiple unmanaged devices. As long as there are no intervening managed network elements, all the adjacent devices and connections are part of one black box.

Black boxes appear as unmanaged subnetworks in the topology, identified by its endpoints, connected directly to the edges of the managed segments. They are represented as BBTopologicalLink or BBDropSideTopologicalLink classes in the SONET/SDH repository.

The BBDropSideTopologicalLink (BBDSTL) represents an edge unmanaged network entity or segment in the SONET/SDH network.

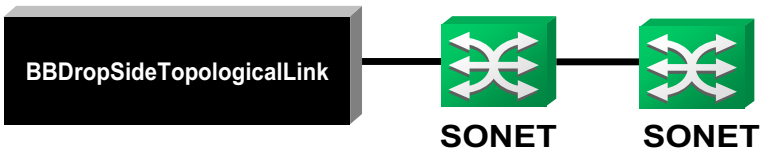

Figure 10 Edge SONET black box

The BBTopologicalLink (BBTL) represents an in-line unmanaged network entity or segment in the SONET/SDH network.

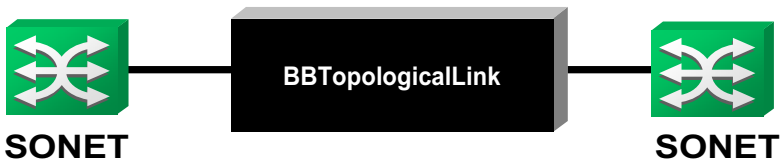

Figure 11 In-line SONET black box

As part of a TopologicalLinkGroup, the black box objects can be part of a 1+1 automatic protection switching group. “1+1 automatic protection switching” on page 97 provides more details.

TopologicalLinkGroup class

TopologicalLink, DropSideTopologicalLink, BBTopologicalLink, and BBDropSideTopologicalLink objects may be part of a TopologicalLinkGroup, as indicated by the ComposedOf relationship. A TopologicalLinkGroup represents a group of topological links that together provide protection capabilities. For example, a TopologicalLink may be part of a 1+1 protection group, or part of a 2F-BLSR ring, etc.

The uses of TopologicalLinkGroup objects are discussed in more detail in "Protection Schemes" on page 95.

Logical connection classes and their relationships

This section describes the object classes used in the Optical Transport Manager to represent logical entities in optical networks.

End points of logical connections are represented by *CTPs* (ConnectionTerminationPoints). Several types of logical connection are represented in Optical Transport Manager:

- *LogicalConnection*---Represents a connection across part of a subnetwork, such as a protection group.
- *SubnetworkConnection*---Represents a connection that crosses a subnetwork.
- *MeshSubnetworkConnection*---Represents a subnetwork connection across a group of devices that implement mesh connectivity and rerouting within the mesh when problems are detected. For instance, Ciena devices can be configured in this manner.
- *HighOrder_Trail*---Represents a trail, with a VC-4 or higher capacity, that carries low-order and high-order circuits.
- *Circuit*---Represents a connection across the entire network which connects two client entry points. A circuit may be carried over a number of *SubnetworkConnections* and/or *MeshSubnetworkConnections.*
  - *HighOrder_Circuit*---Represents a circuit that carries a VC-3 or higher capacity circuit.
  - *LowOrder_Circuit*---Represents a circuit that carries a VC-2 or lower capacity circuit.

In the simplest case, a *LogicalConnection* is *LayeredOver* a single *TopologicalLink*. Figure 12 on page 33 shows the main relationships between *CTPs*, *PTPs*, *TopologicalLinks,* and *LogicalConnections* for a simple linear connection.

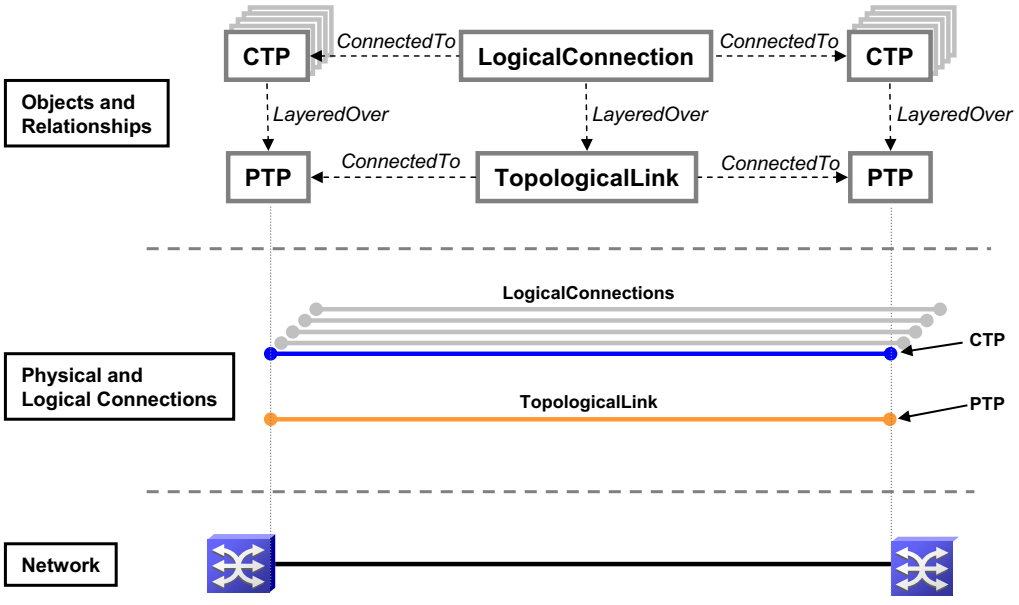

Figure 12 Logical connection class relationships in SONET/SDH

The end points of logical connections are represented by *CTPs,* which are *LayeredOver PTP* objects. Each *CTP* object contains the timeslot information for the connection that uses it. Many *CTP* objects can be *LayeredOver* each *PTP* when many low-speed circuits are provisioned on the same higher speed port.

LogicalConnection class

Logical connections are represented by *LogicalConnection* objects with endpoints represented as *CTP* objects. The logical and physical connections are related using *LayeredOver* from *CTP* to *PTP*, and from *LogicalConnection* to *TopologicalLink* as shown in Figure 12 on page 33. Many *LogicalConnection* objects may be *LayeredOver* a single *TopologicalLink* in order to represent the low-speed circuits provisioned within a high-speed trunk.

The *LogicalConnection* class is used to represent the connection across each protection group when a *SubnetworkConnections* passes through more than one.

SubnetworkConnection class

A *SubnetworkConnection* is a logical connection across a subnetwork. A subnetwork is a feature implemented in element managers that allows management of locally connected network elements.

A *SubnetworkConnection* may pass over several protection groups. It is represented using the relationship *LayeredOver* a number of *LogicalConnections* that each represent the connection across a protection group.

If a *SubnetworkConnection* passes through only one protection group, or it uses linear connection, it is *LayeredOver* the physical objects directly (*TopologicalLinkGroup, or TopologicalLink).*

In the case of a singleton subnetwork that passes through only one network element, the *SubnetworkConnection* has no *LayeredOver* relationship, but its *CTPs* are *LayeredOver* the appropriate *PTPs* on the network element.

MeshSubnetworkConnection class

A *MeshSubnetworkConnection* is a logical connection across a subnetwork that implements mesh protection. The connection is assigned a “home route” that it follows until a network failure is detected. Alternative routes are dynamically calculated when a network fault occurs, and affected connects are allocated new routes. For instance, Ciena devices can be configured in this manner.

Figure 13 on page 35 shows how a circuit passing through the network is modeled.

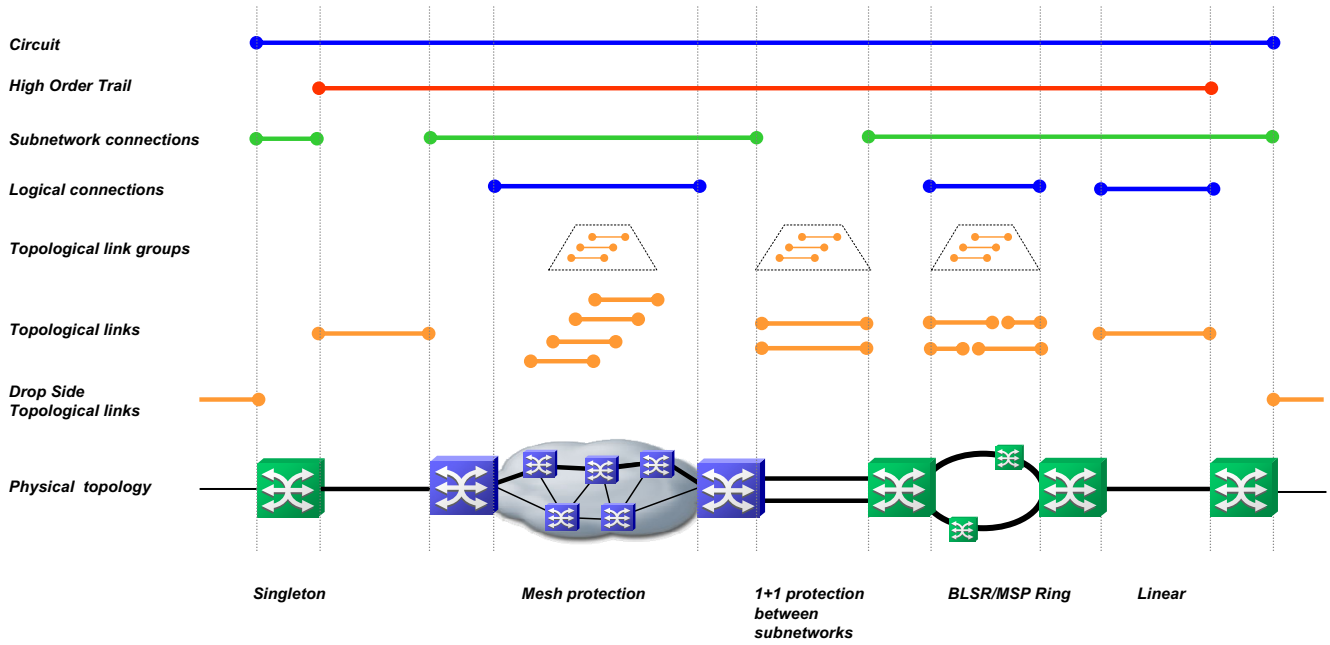

Figure 13 A circuit that is LayeredOver other entities as it passes through the network.

Circuit class

A circuit passing through different vendor equipment (shown as green and blue device symbols) and passing through various protection schemes is modeled by a set of objects that represent physical and logical connections. The *LayeredOver* relationship is used to define the dependencies between the objects. In Figure 13 on page 35, when an object is shown vertically above another object, a *LayeredOver* relationship is implied.

HighOrder_Trail class

A HighOrder_Trail is a logical connection that traverses the network beginning on the high-speed port of the a-end optical network element and ends on the high-speed port of the z-end optical network element.

Physical topology

The Optical Transport Manager model represents the physical connectivity of devices and connections by a specific set of relationships. These relationships are described in this section.

Figure 14 on page 36 shows an example of a connection object model that is used to model the physical configuration of protection groups. Note that a *SubNetworkConnection* may be *LayeredOver* several *LogicalConnections*, if it passes through more than one protection group.

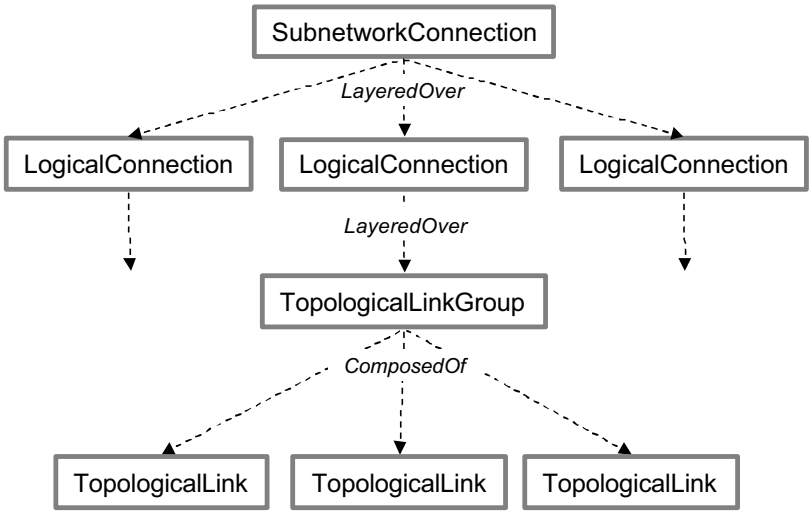

Figure 14 Connection Object Classes and Their Relationships

The end-to-end client service across a subnetwork is represented by a *SubnetworkConnection* that is *ConnectedTo CTP* objects on the client ports (not shown in Figure 14 on page 36). Generally, a path through a network is represented by a number of *LogicalConnection* objects, each *LogicalConnection* representing a connection across a segment of the network that provides protection capability such as 1+1 or 2F-BLSR.

The *TopologicalLinkGroup* objects are *ComposedOf TopologicalLink* objects that represent the physical connections that comprise the protection group. In addition, *RingProtectionGroup* objects and/or *LogicalConnectionProtectionTPGroup* objects model physical topology such as BLSR/MS-SPRing or UPSR/SNCP rings. "Protection Schemes" on page 95 provides more details.

The Optical Transport Manager represents logical connections across a protection ring using *LogicalConnection* objects *LayeredOver TopologicalLinkGroup* objects. The Optical Transport Manager uses additional relationships and objects that are specific to each *LogicalConnection* object to calculate root causes and impacts. "Notifications and Impacts for SONET/SDH Networks" on page 69 and "Notifications and Impacts for WDM Networks" on page 83 provide more information.

CHAPTER 3
Classes and Relationships for PDH

This chapter describes the elements discovered and managed in low-order SONET/SDH networks by the Optical Transport Manager and the problems diagnosed for each element.

Topics covered in this chapter are:

- Optical Transport Manager analysis 38
- PDH object classes in Optical Transport Manager..... 38

Optical Transport Manager analysis

The Optical Transport Manager for PDH uses object classes to represent low-order SONET/SDH devices and populates them to the repository during discovery. The EMC Smarts repository models the topology of the low-order SONET/SDH network being managed. This topology is used to build the codebook, which is the basis for root-cause analysis.

The PDH domain includes all of the low-order circuits with “SDH” link paths of VC11, VC12, and VC2. These are the lower-bandwidth devices with speeds of 1.5M, 2M and 6M respectively. High-order devices and protocols are populated to the SONET/SDH domain.

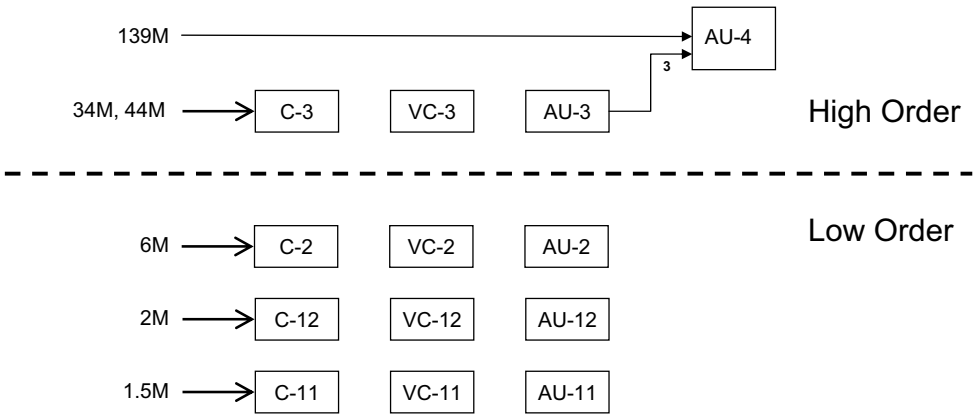

Figure 15 Separation of High-order and Low-order Domains

The Optical Transport Manager for PDH uses the relationships in the low-order SONET/SDH topology and cross-correlates with Optical Transport Manager for SONET/SDH domain to calculate the impact that a root-cause problem in one element has on the elements and services that are connected to, or depend on it.

“Protection Schemes” on page 95 provides more details.

PDH object classes in Optical Transport Manager

Table 3 on page 38 lists the classes in the Optical Transport Manager object model that are visible in the Global Console when it connects to an instance of the Optical Transport Manager. Many of the terms used are derived from the TMF 814 object model.

Table 3 **Classes in the Optical Transport Manager object model**

Category	Class	Description
Physical Equipment	OpticalNetworkElement	Device supporting low-order SONET/SDH
	Card	Equipment and Card are interchangeable terms. These are physical subsystems that plug into OpticalNetworkElements and support one or more PTPs.
	Equipment	
Port	PTP	Low-order Physical Termination Point
Physical Connections	DropSideTopologicalLink	A physical connection, such as a fiber link, that connects a device managed by the Optical Transport Manager to another device that is not managed by the Optical Transport Manager.

Table 3 Classes in the Optical Transport Manager object model (continued)

Category	Class	Description
Logical Connections	CTP	Connection Termination Point. End point of a logical connection.
	HighOrder_Trail	A logical connection across a network that may cross several subnetworks.
	LowOrder_Circuit	An end-to-end connection across a network that may cross several subnetworks and includes CTPs. This entity is used to represent client services.

Physical object classes and their relationships

This section describes the low-order SONET/SDH physical object classes used in the Optical Transport Manager for PDH and the relationships between them that are used to model the PDH domain of optical networks.

OpticalNetworkElement class

The OpticalNetworkElement class represents whole optical devices. These devices contain Cards or Equipment that carry and process optical signals, and that perform administrative and other functions.

OpticalNetworkElement, Card, Equipment and PTP objects

Figure 16 on page 39 shows the physical and logical objects modeled by the Optical Transport Manager for PDH.

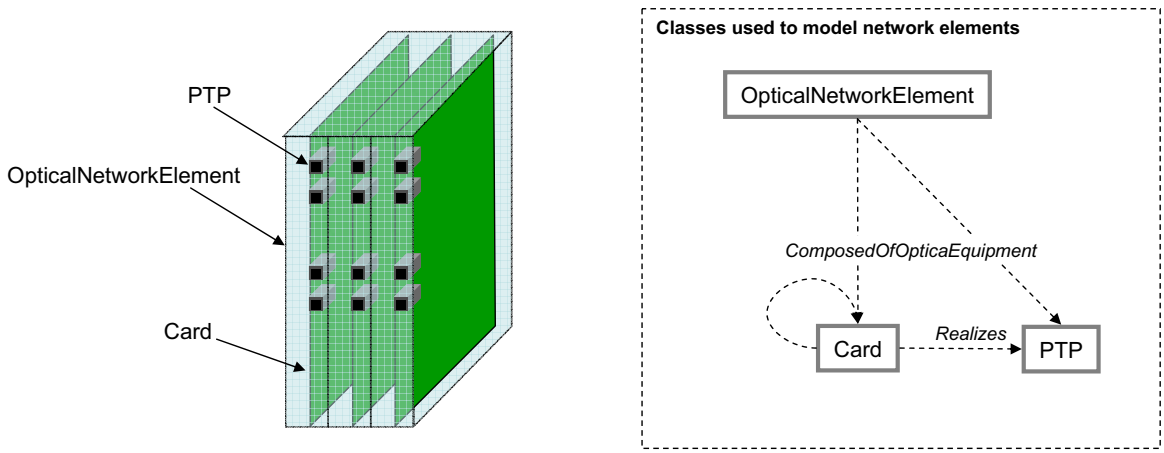

Figure 16 Physical and logical objects modeled by Optical Transport Manager for PDH

The top level physical object is a OpticalNetwokElement. It is composed of *Card* or *Equipment* objects, which in turn may realize multiple *PTP* (Physical Termination Point) objects.

DropSideTopologicalLinks

The physical fiber links between network elements are modeled using two types of topological link, depending on whether the Optical Transport Manager manages the network element on one or both ends of the link.

- *DropSideTopologicalLink*---Models links where the Optical Transport Manager for PDH manages only one end of the link. *DropSideTopologicalLinks* do not include *CTPs.*

Figure 17 on page 40 shows the connection between devices and fiber links, which is modeled using a *ConnectedTo* relationship between a *TopologicalLink* and the appropriate *PTP* object in the network element at each end of the link.

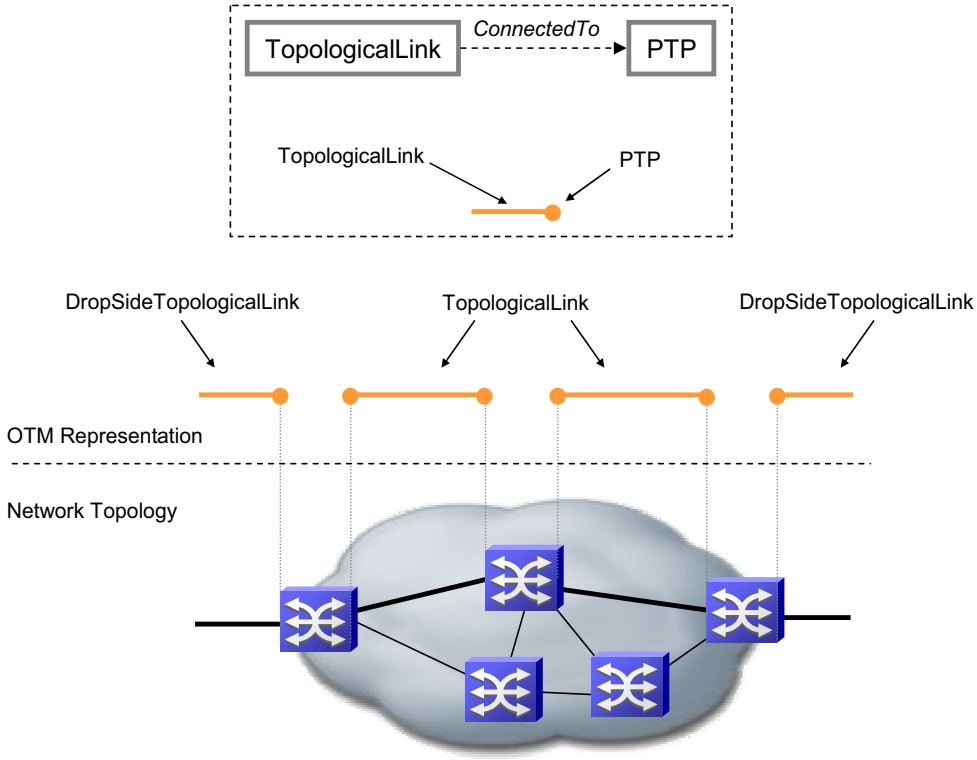

Figure 17 Topological link objects and relationships

The root-cause and impact analysis calculations are slightly different in each of the classes representing topological links. These calculations take account of the fact that some alarms are not received when problems happen on drop-side connections.

Note: The *TopologicalLink* class can be used in the EMC Smarts model to represent unidirectional or bidirectional connections, as appropriate. In the PDH model, these objects represent a bidirectional connection. For example, each *TopologicalLink* object represents a fiber pair.

TopologicalLinkGroups

TopologicalLink and DropSideTopologicalLink objects may be part of a *TopologicalLinkGroup,* as indicated by the *ComposedOf* relationship. A *TopologicalLinkGroup* represents a group of topological links that together provide protection capabilities. For example, a TopologicalLink may be part of a 1+1 protection group, or part of a 2F-BLSR ring, etc.

The uses of TopologicalLinkGroup objects are discussed in more detail in "Protection Schemes" on page 95.

Logical object classes and their relationships

This section describes the object classes used in the Optical Transport Manager for PDH to represent logical entities in optical networks. Several types of logical connection are represented in Optical Transport Manager:

- *LowOrder_Circuit*---Represents a connection across the entire network which connects two client entry points. A *LowOrder_Circuit* may be carried over a number of *HighOrder_Trails* and includes end points represented by *CTPs* (ConnectionTerminationPoints).
- *HighOrder_Trail*---Represents a circuit that carries a VC3 or higher capacity circuit. *HighOrder_Trails* in Optical Transport Manager for PDH do not include *CTPs.*

In the simplest case, a *LogicalConnection* is *LayeredOver* a single *HighOrder_Trail*. Figure 18 on page 41 shows the main relationships between *CTPs*, *PTPs*, *HighOrder_Trails,* and *LogicalConnections* for a simple linear connection.

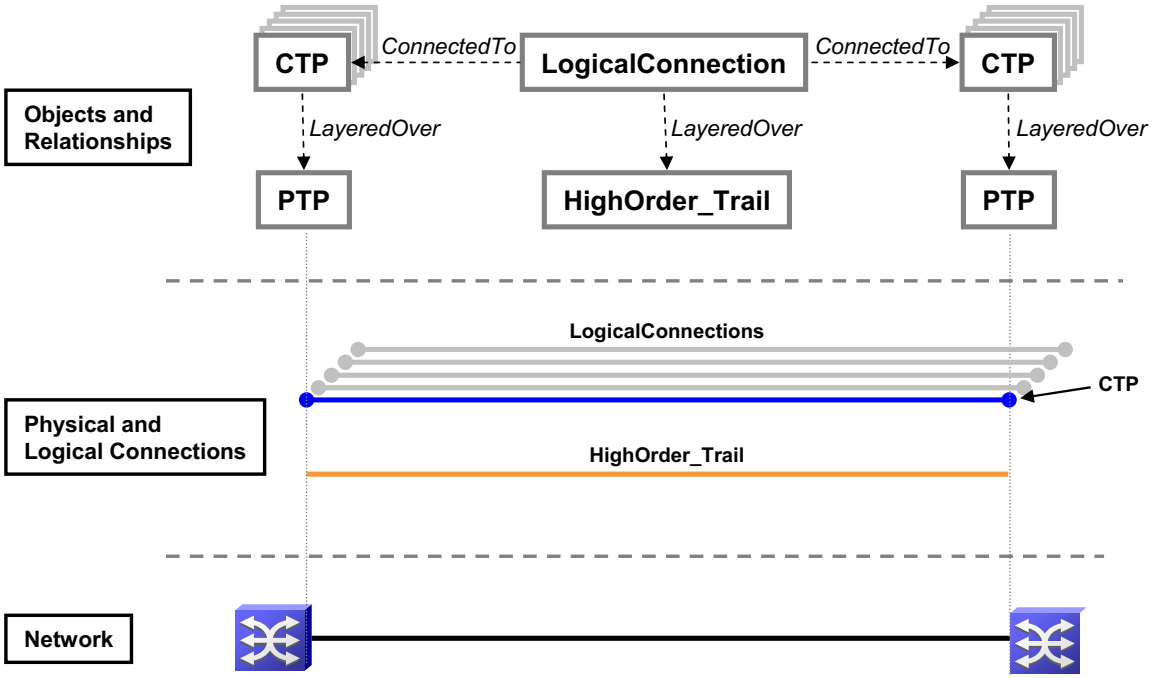

Figure 18 Logical object class relationships in PDH

The end points of logical connections are represented by *CTPs,* which are *LayeredOver PTP* objects. Each *CTP* object contains the time slot information for the connection that uses it. Many *CTP* objects can be *LayeredOver* each *PTP* when many low-speed circuits are provisioned on the same higher speed port.

Figure 19 on page 42 shows how a circuit passing through the network is modeled.

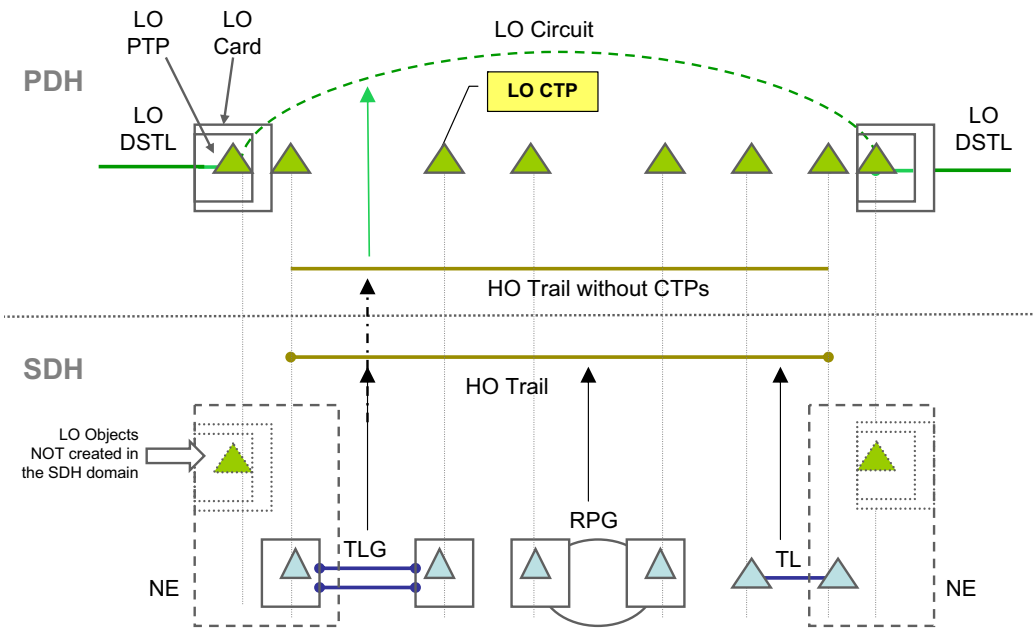

Figure 19 A LowOrder_Circuit that is LayeredOver other entities as It passes through the network.

A circuit passing through different vendor equipment (shown as green and blue device symbols) and passing through various protection schemes is modeled by a set of objects that represent physical and logical connections. The *LayeredOver* relationship is used to define the dependencies between the objects. In Figure 19 on page 42, when an object is shown vertically above another object, a *LayeredOver* relationship is implied.

Physical topology

The Optical Transport Manager model represents the physical connectivity of devices and connections by a specific set of relationships. These relationships are described in this section.

Figure 20 on page 43 shows an example of a connection object model that is used to model the physical configuration of protection groups. Note that a *HighOrder_Trail* may be *LayeredOver* several *LogicalConnections*, if it passes through more than one protection group.

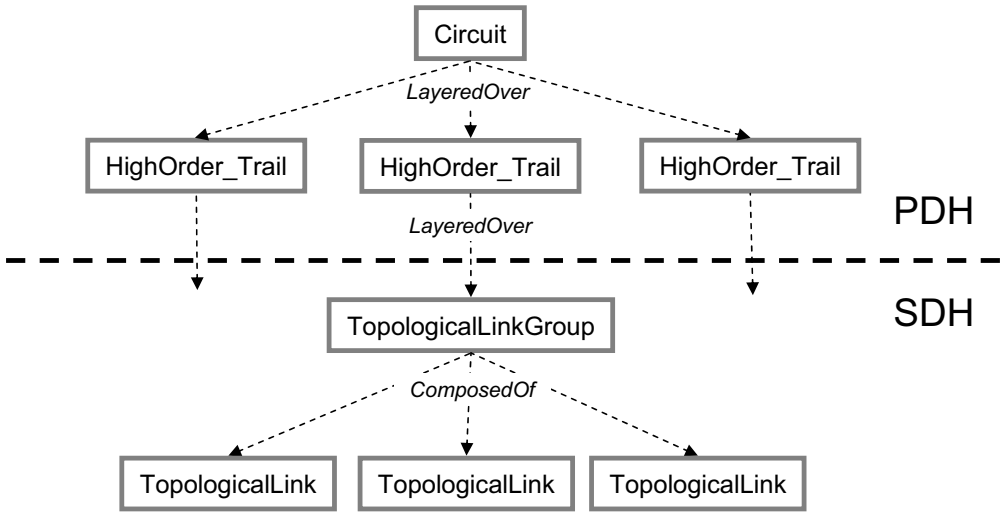

Figure 20 Connection Object Classes and Their Relationships

The end-to-end client service across a network is represented by a *LowOrder_Circuit* that is *ConnectedTo LowOrderPTP* objects on the client ports (not shown in Figure 20 on page 43). Generally, a path through a network is represented by a number of *LogicalConnection* objects, each *LogicalConnection* representing a connection across a segment of the network that provides protection capability such as 1+1 or 2F-BLSR.

The *TopologicalLinkGroup* objects are *ComposedOf TopologicalLink* objects that represent the physical connections that comprise the protection group. In addition, *RingProtectionGroup* objects and/or *LogicalConnectionProtectionTPGroup* objects model physical topology such as BLSR/MS-SPRing or UPSR/SNCP rings. F "Protection Schemes" on page 95 provides more information.

The Optical Transport Manager represents logical connections across a protection ring using *LogicalConnection* objects *LayeredOver TopologicalLinkGroup* objects. The Optical Transport Manager uses additional relationships and objects that are specific to each *LogicalConnection* object to calculate root causes and impacts. "Notifications and Impacts for SONET/SDH Networks" on page 69 and "Notifications and Impacts for WDM Networks" on page 83 provide more information.

CHAPTER 4
Classes and Relationships for WDM

This chapter describes the elements discovered and managed in WDM networks by the Optical Transport Manager for WDM.

Topics in this chapter include:

- About the Optical Transport Manager WDM model 46
- WDM Object Classes in Optical Transport Manager 48
- Classes that represent equipment..... 50

About the Optical Transport Manager WDM model

The Optical Transport Manager for WDM uses object classes that represent each type of element to populate the EMC Smarts repository that models the topology of the WDM network being managed. This, in turn, is used to build the codebook, which is the basis for root-cause analysis. The Optical Transport Manager for WDM also uses the relationships in the topology to calculate the impact that a root-cause problem in one element has on the elements and services that are connected to, or depend on it.

The model for WDM is more granular than that for SONET/SDH because there are fiber connections inside devices that are potential failure points and must therefore be part of the model.

As an example of what needs to be modeled in a WDM device, Figure 21 on page 46 is a schematic of a WDM Transmit End Terminal device. This illustrates how the various components are connected together to take a number of incoming SONET/SDH services, convert them each to a WDM signal on a wavelength, and then combine the wavelengths onto a single fiber.

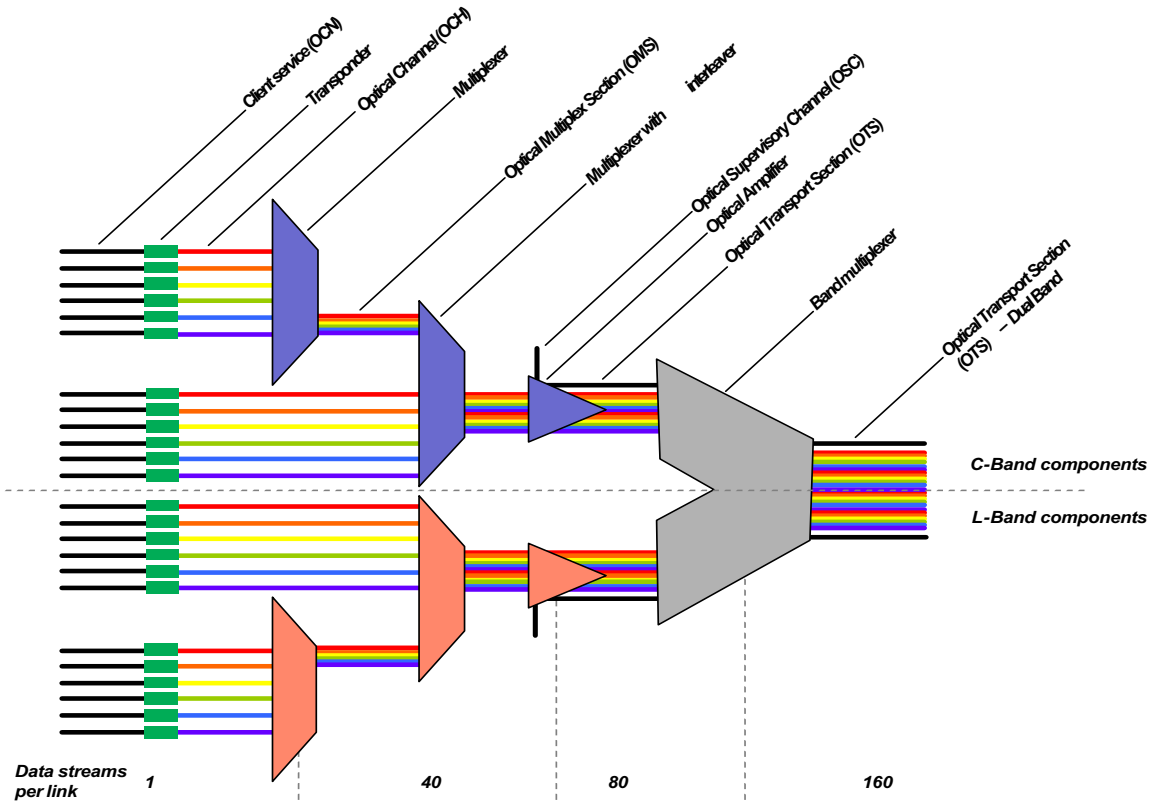

Figure 21 Schematic of a terminal end amplifier

Each incoming client signal is converted to an *Optical Channel (OCH)*, which carries the signal on a specific wavelength and adds a WDM header. A number of wavelengths are combined into a single fiber using a *Multiplexer*. Due to physical limitations, several stages of multiplexing are required to, for instance, combine 160 wavelengths onto a single fiber. In the example shown, 80 wavelengths in the C-band are combined in two stages of multiplexing, and are then combined with 80 other wavelengths in the L-band.

The *Optical Supervisory Channel (OSC),* which carries management information on an additional wavelength, is added in the optical amplifier that is in each band's path in front of the *Band Multiplexer*.

A WDM Receive End Terminal performs the reverse function in a similar arrangement. Other functions, such as in-line amplifiers and back-to-back amplifiers are made up of combinations of similar components.

Support for Multiplexing and Demultiplexing in the same circuit pack

In the next generation networks and network elements, multiplexing and demultiplexing functionality are provided by the same circuit pack. Optical Transport Manager provides support for such networks and network elements having multiplexers and demultiplexers within the same circuit pack.

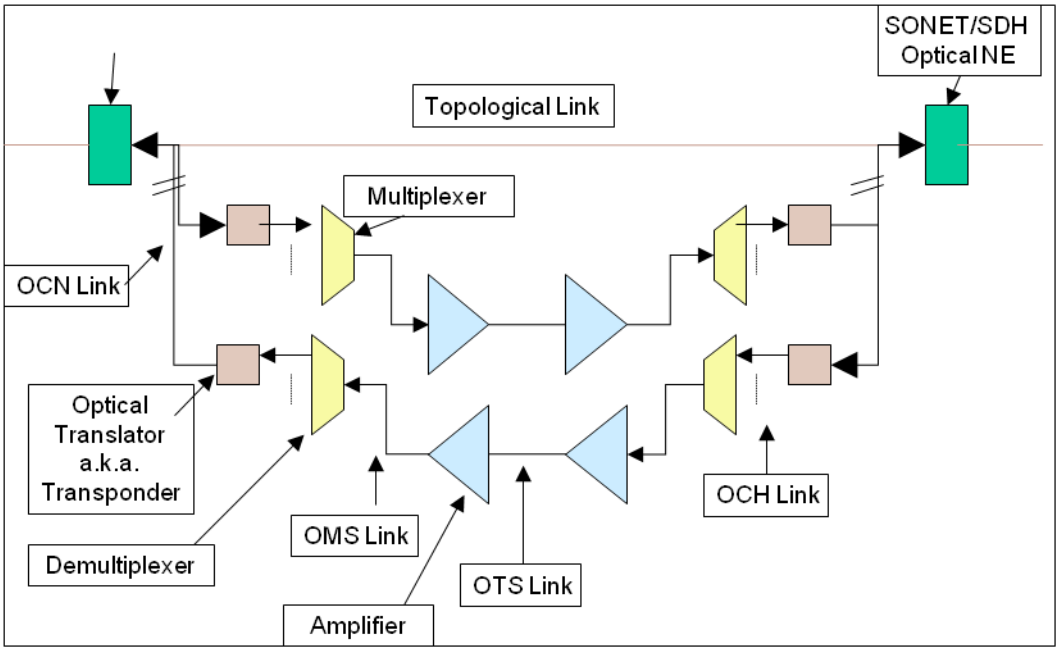

Figure 22 WDM NE with Separate Mux/Demux card

A number of wavelengths are combined into a single fiber using a Multiplexer. Similarly, incoming signal is received through the receiving amplifier which feeds the signal into the Demultiplexer. The Demultiplexer extracts the OCH signal and hands over to the Transponders. The Transponders in turn convert the signal into Optical Carrier Network (OCN) signals and handle it further to the client.

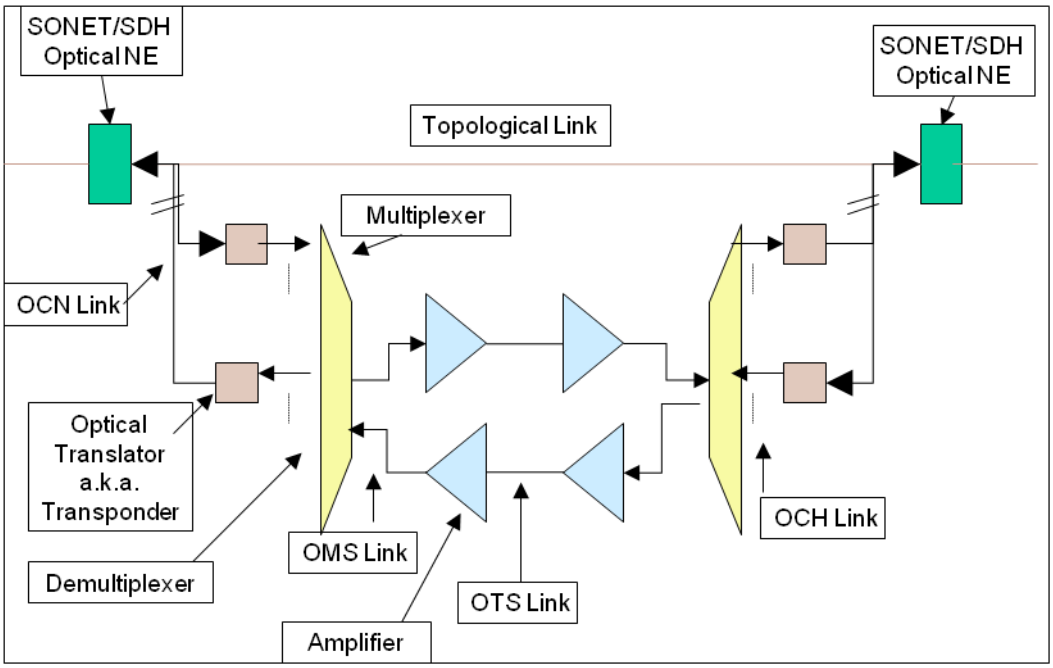

Figure 23 WDM NE with Combo Mux/Demux Card

The classes in the object model for WDM in Optical Transport Manager represent cards performing the functions described above, the ports on those cards, and the physical and logical connections between cards within and between devices.

WDM Object Classes in Optical Transport Manager

Table 4 on page 48 lists the classes used in the WDM object model of the Optical Transport Manager that are visible in the Global Console when it connects to an instance of the Optical Transport Manager.

Table 4 Classes in the WDM object model

Category	Class	Description
Equipment	Facility	Generic class that represents entities in the network that can be assigned during design of circuits.
	OpticalNetworkElement	Device supporting WDM.

Table 4 Classes in the WDM object model (continued)

Category	Class	Description
Cards	Card	Generic class used to represent cards or circuit packs in a network element, including multiplexers and demultiplexers.
	Amplifier	Amplifier card. Can be transmit, receive, or in-line.
	Transponder	Card with transponder functionality. Can have transmit, receive, or both capabilities.
	ControlModule	Models a Controller card.
	MuxModule	Models an OTN multiplexer/demultiplexer card, or a passive filter.
	OcmModule	Models an OTN ROADM Optical Channel Monitor (OCM) card.
	WssModule	Models an Optical Transport Network (OTN) ROADM Wavelength Selective Switch (WSS) card.
Ports	TransponderInOcnPort/ TransponderOutOcnPort	Port on a transponder that faces the client and carries SONET/SDH signals.
	TransponderInOchPort/ TransponderOutOchPort	Port on a transponder that faces a multiplexer and carries an optical channel.
	TransponderInFecPort	Receiving forward error correction (FEC) facility on a transponder.
	MuxInOchPort	Port on a multiplexer that receives an optical channel from a transponder.
	MuxInOmsPort/ MuxOutOmsPort	Port on a multiplexer carrying an optical multiplex section. Input will be connected to another multiplexer. Output will be connected to a transmit amplifier.
	DemuxOutOchPort	Port on a demultiplexer that sends an optical channel to a transponder.
	DemuxInOmsPort/ DemuxOutOmsPort	Port on a demultiplexer carrying an optical multiplex section. Input will be connected to a receive amplifier. Output will be connected to another demultiplexer.
	AmpInOmsPort/ AmpOutOmsPort	Port on a transmit or receive amplifier connected to a multiplexer or demultiplexer.

Table 4 Classes in the WDM object model (continued)

Category	Class	Description
Ports *(continued)*	AmpInOtsPort/ AmpOutOtsPort	Input and output port of an in-line amplifier.
	AmpInOscPort/ AmpOutOscPort	Optical supervisory channel input and output ports on amplifiers.
	PTP	Physical Termination Point. Bidirectional SONET/SDH port.
Physical Connections	TopologicalLink	A bidirectional SONET/SDH link that terminates on a PTP on each of its two ends.
	FiberLink	A unidirectional physical connection, such as a fiber connecting two optical ports.
Logical Connections	LogicalLink	A unidirectional link that corresponds to a link connection or a network connection.
	OcnLink	A logical connection, generally spanning multiple physical components and links, that connects an OCN input port to an OCN output port.
	OchLink	A logical connection, generally spanning multiple physical components and links, that connects an OCH input port to an OCH output port.
	ClientCircuit	A logical connection spanning the entire WDM domain that represents a client's connection. Wavelength service is a ClientCircuit.
	ClientTrail	Like ClientCircuit, a logical connection between OCN ports, but underlying it. A ClientCircuit may be carried over multiple ClientTrails.
Protection	LinkGroup	A logical grouping of OchLink or OcnLink objects to create a protected ClientCircuit or TopologicalLink.
Abstract Entities	BBFiberLink	An unmanaged, unidirectional connection between managed entities or at the edge of the managed network.
	PassiveFiberLink	A uni-directional link that generally corresponds a connection between an output port and an input port over passive filters.

The classes are described in more detail in the sections that follow in this chapter.

Classes that represent equipment

This section describes the object classes used in the Optical Transport Manager to represent physical equipment.

- Facility
- OpticalNetworkElement
- Card
- InputPort
- OutputPort

Figure 24 on page 51 shows the major physical elements that are modeled in the Optical Transport Manager for WDM along with the classes used to model them. In this figure, the generic label *(Port)* is used to indicate that each card will realize InputPort or OutputPort classes according to the card type. The Amplifier and Transponder classes are inherited from the Card class and have the same relationships as shown here.

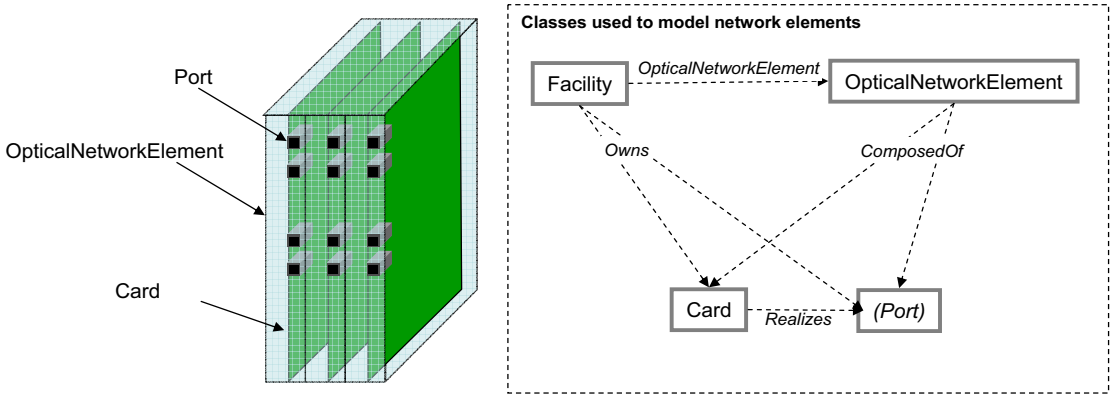

Figure 24 Major physical elements and classes in the Optical Transport Manager for WDM

Facility class

The Facility class represents entities that can be assigned in the provisioning system during circuit design. Depending on the type of Facility object, certain of the relationships will be populated. For instance, an Optical Carrier Network (OCN) facility will Own its Transponder and associated PTP objects.

OpticalNetworkElement class

The OpticalNetworkElement class represents whole optical devices. These devices contain cards that carry and process optical signals, and cards that perform administrative and other functions.

Card classes

This section describes the object classes used in the Optical Transport Manager for WDM to represent cards and ports found in WDM networks.

- Card
- Amplifier
- Transponder
- ControlModule
- MuxModule
- OcmModule
- WssModule

Card class

The Card class is a generic class that is used to represent cards or circuit packs in a device, when these cards or circuit packs are not otherwise represented by a specialized class. For example, multiplexers, demultiplexers, and non-optical cards performing administrative functions are represented by the Card class.

A Card object that represents a card that does not perform an optical function will not have any port objects associated with it.

Figure 25 on page 52 shows the classes and relationships used to represent a multiplexer and a demultiplexer.

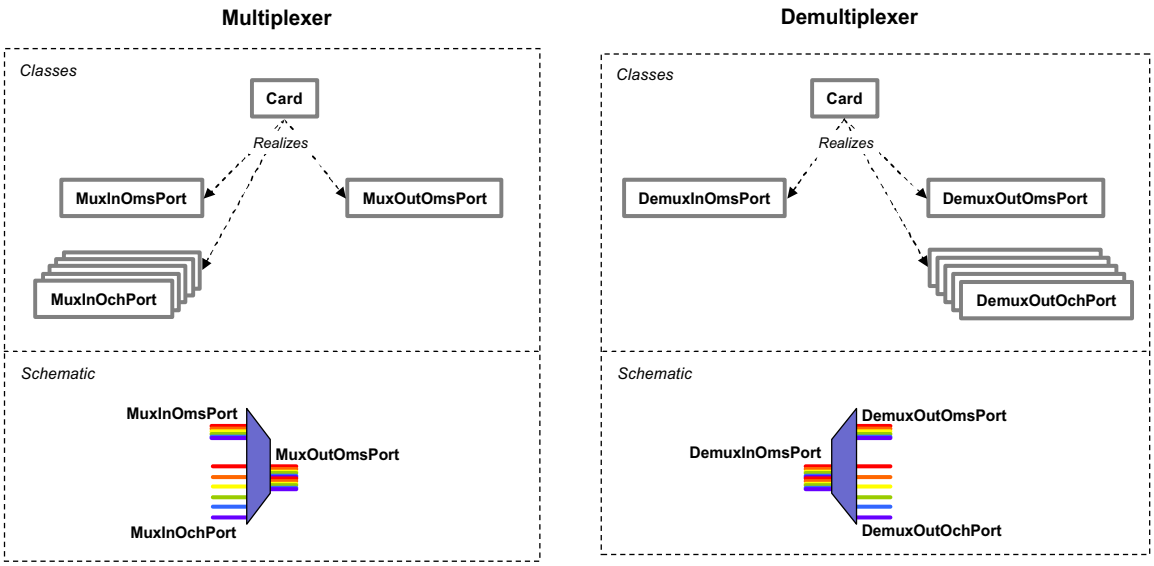

Figure 25 Classes and relationships for a multiplexer and a demultiplexer

Multiplexers combine signals on multiple incoming wavelengths onto a single output fiber. When the multiplexer includes an interleaver, an additional group of wavelengths that were previously multiplexed are added to the multiplexed wavelengths.

Note: The MuxInOmsPort is present only when the multiplexer contains an interleaver that is taking input from another multiplexer.

The demultiplex function is the inverse of the multiplex function.

Note: The MuxOutOmsPort is present only when the demultiplexer contains an interleaver that feeds another demultiplexer.

Subslots

Optical devices use slots on a shelf to place optical equipment. Depending on the equipment and the supplier, some devices span multiple slots while some suppliers place multiple equipments within a single slot. The latter case is referred as subslot or subcard handling. Optical Transport Manager supports explicit subcard modeling capability. Both cards and subcards are modeled as OTM class "Card" in the OTM topology. Figure 25 depicts a subslot configuration.

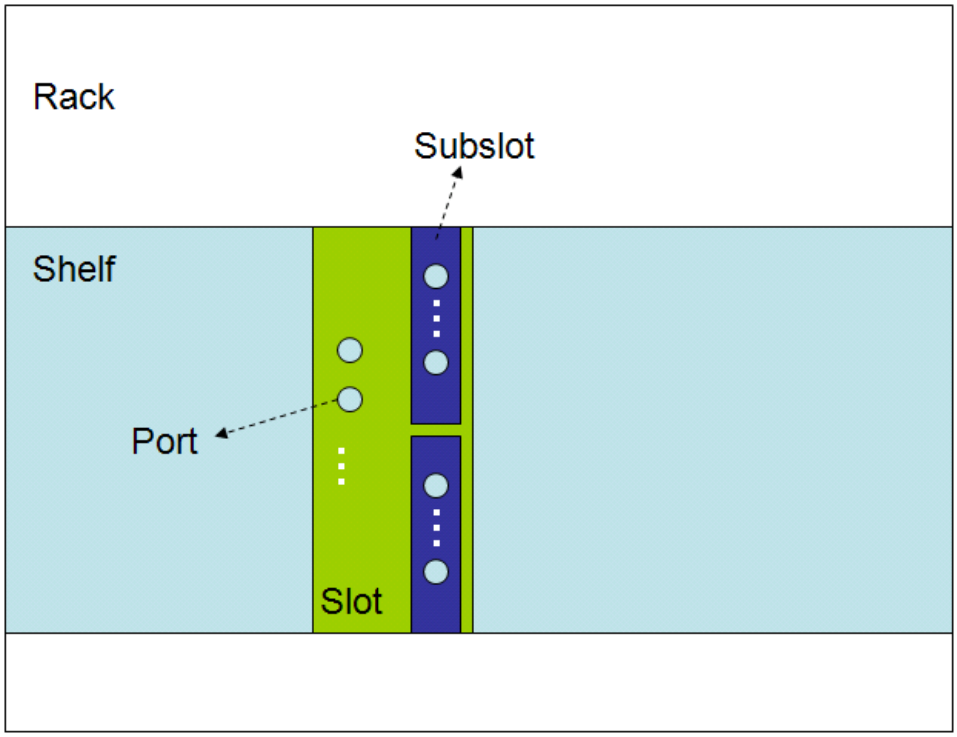

Figure 26 Subslot configuration

Amplifier class

There are three types of amplifier that are modeled in the Optical Transport Manager for WDM using the Amplifier class.

- Transmit amplifier---Part of a transmit end terminal or back-to-back transponder
- Receive amplifier---Part of a receive end terminal or back-to-back transponder
- In-line amplifier---Used along Optical Transport Section (OTS) paths to boost the signal

The same class, Amplifier, is used to model each case. The difference between the configurations is the way the Optical Supervisory Channel (OSC) is split out and/or added in, which in turn determines which port type---Optical Multiplex Section (OMS) or OTS---forms the input and output. Different combinations of AmpInOmsPort, AmpOutOmsPort, AmpInOtsPort, AmpOutOtsPort, AmpInOscPort and AmpOutOscPort are used as required.

Figure 27 on page 54 shows the classes and relationships for transmit and receive amplifiers.

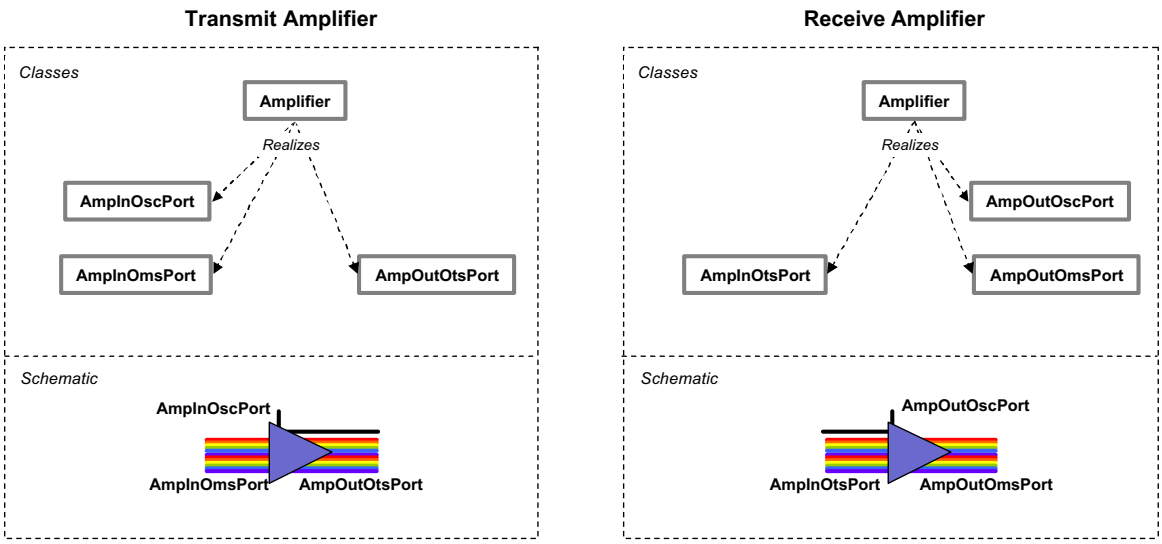

Figure 27 Classes and relationships for transmit and receive amplifiers

Figure 28 on page 54 shows the classes and relationships for an in-line amplifier.

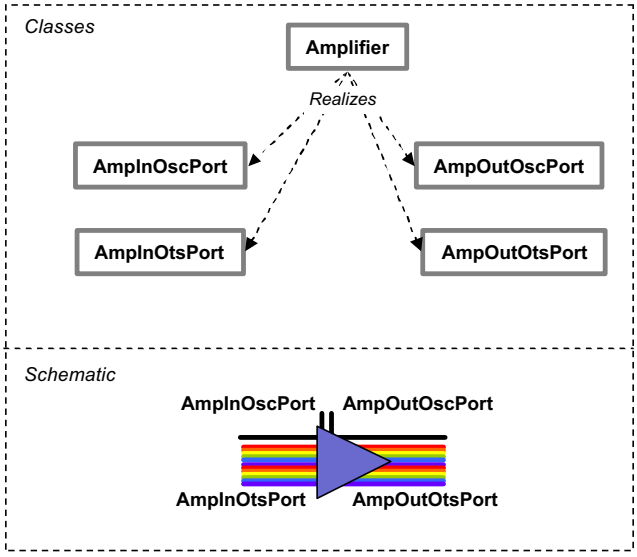

Figure 28 Classes and relationships for a in-line amplifier

The reverse amplifier relationship is used to identify peers of amplifiers that transmit in each direction. Figure 29 on page 55 shows the classes and relationships for a reverse amplifier.

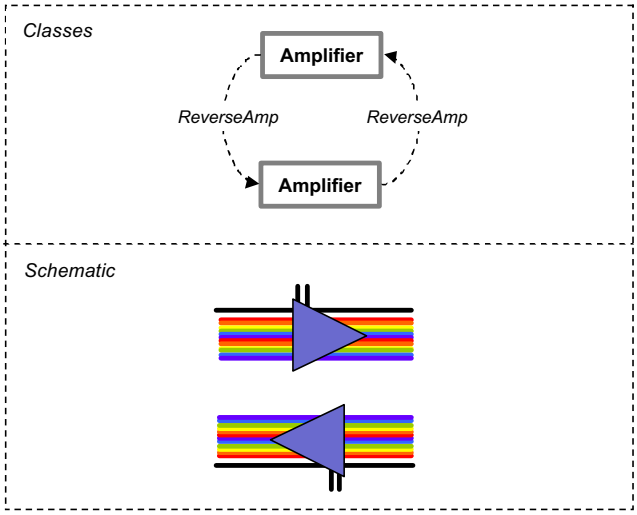

Figure 29 Classes and relationships for a reverse amplifier

In-line amplifiers have additional, special relationships between them that are used during impact analysis of problems related to the OSC. These are illustrated in Figure 30 on page 55.

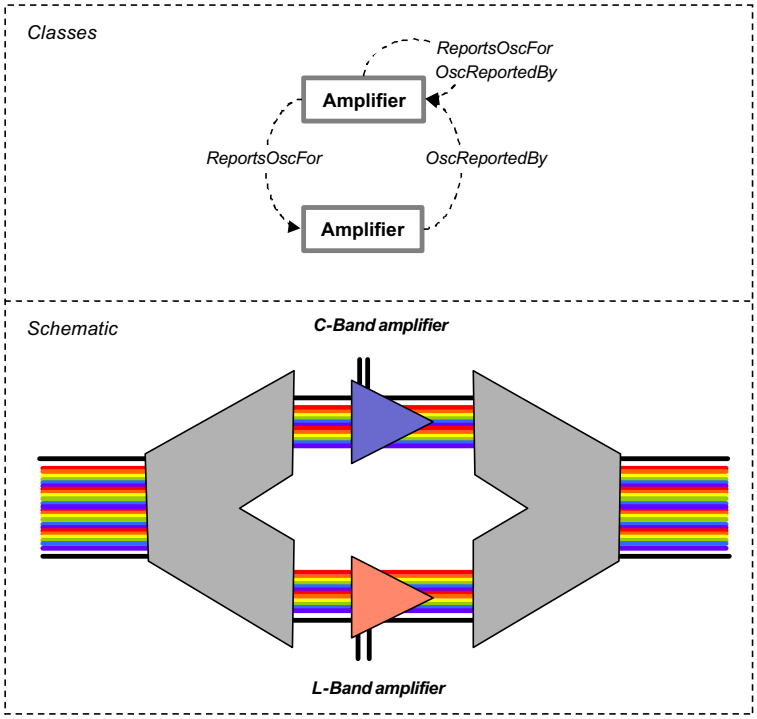

Figure 30 Amplifier relationships used for analysis of OSC problems

Transponder

Transponders are components that convert signals from one protocol to another. In WDM, transponders operate in one of two ways:

- Converting from OCN to OCH
- Converting from OCH to OCN

These two cases are modeled in slightly different ways.

Figure 31 on page 56 shows the classes and relationships for transponders converting from OCN to OCH and from OCH to OCN.

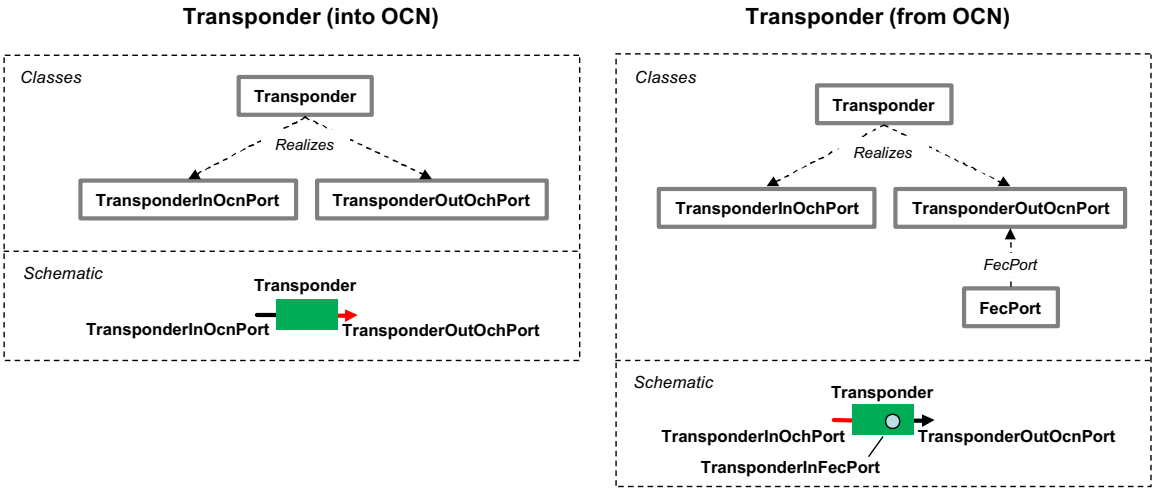

Figure 31 Classes and relationships for OCN-OCH and OCH-OCN transponders

In the case of translating from OCH to OCN, the internal forward error correction (FEC) port is modeled by a TransponderInFecPort since alarm conditions can be raised on this port.

ControlModule

Control module is part of the Ciena CN 4200 system. There are several cards in the CN 4200 family that may function as a controller module when installed in slot A. The Ciena cards that maybe used as the control module for the CN 4200 are:

- M3S,
- M6S,
- F 10-T,
- F-10A,
- F-10P,
- FC4-T

System controller functions include system initialization, diagnostics, provisioning, IP address detection and resolution, alarm reporting, network management connectivity, maintenance, and current and historical performance monitoring.

MuxModule

The MuxModule object represents the Ciena CN 4200 VMUX card, Ciena's channelized, managed optical multiplexer-demultiplexer card. This card is critical to O-USPR and 2-degree ROADM protection schemes that the CN 4200 may be set up to implement.

The VMUX card also contains a passive filter module used to support multi-degree ring and mesh topologies. Discovery will find provisioned passive filters and model them as MuxModules. If the passive filter is used without provisioning, it will not be discovered from the MIB walk and must be created manually.

OcmModule

OcmModule represents the Ciena CN 4200 system's Optical Channel Monitor card. The OCM is one of the four card used to implement ROADM protection with the CN 4200 system. Each ROADM node must have one OCM to monitor optical power levels and achieve power equalization across all wavelengths. A single OCM card can monitor up to 44 wavelengths on eight ports.

WssModule

The WssModule object represents the Ciena CN 4200 DWR (Dynamic Wavelength Router) card. The DWR module performs the primary multi-degree optical switching functionality at each ROADM node using a Wavelength Selectable Switch (WSS). Each DWR module contains a WSS capable of dynamically adding, dropping, or expressing any of 44 wavelengths to any of nine ports.

Port classes

Each type of port in WDM has its own class that models the specific alarm behavior seen at that point in the network. The port classes for each type of card are described in Table 5 on page 57. Some cards have a specific class associated with them (for example, Amplifier), while others use the Car*d* class.

Table 5 Port classes in the WDM object model

Card Type	Class	Port Objects
Multiplexer	Card	MuxInOmsPort MuxInOchPort MuxOutOmsPort
Demultiplexer	Card	DemuxInOmsPort DemuxOutOmsPort DemuxOutOchPort
Transmit amplifier	Amplifier	AmpInOmsPort AmpOutOtsPort AmpInOscPort
Receive amplifier	Amplifier	AmpInOtsPort AmpOutOmsPort AmpOutOscPort
In-line amplifier	Amplifier	AmpInOtsPort AmpOutOtsPort AmpInOscPort AmpOutOscPort
Transponder OCN (into OCH)	Transponder	TransponderInOcnPort TransponderOutOchPort
Transponder (OCH into OCN)	Transponder	TransponderInOchPort TransponderOutOcnPort TransponderInFecPort

Note: Port objects are only created in the Optical Transport Manager for WDM when the port is used by a link that is being managed. This means that the ports seen in the Topology Manager may be a subset of those on the actual equipment.

Physical and logical connection classes

The following classes are used to model connections in the Optical Transport Manager for WDM:

- FiberLink---Unidirectional physical link
- OchLink---Unidirectional link at the OCH layer
- OcnLink---Unidirectional link at the OCN layer
- TopologicalLink---Bidirectional link that is carrying a client service across the WDM network
- ClientCircuit ---Unidirectional link traversing the WDM domain
- ClientTrail---Unidirectional link carrying a segment of the ClientCircuits

Special treatment is given to band-multiplexers, which are passive devices with no alarms associated with them. This is described in "FiberLink used in modeling band-multiplexer" on page 59.

The connection classes are described in the following sections.

FiberLink class

A FiberLink is used to represent a unidirectional physical connection between two ports, which is always an optical fiber. A FiberLink has the relationship Feeds with each of the ports to which it is connected.

These relationships are shown in Figure 32 on page 58. In this figure, generic labels (InputPort) and (OutputPort) indicate that FiberLink objects represent fibers that connect to any of the types of port represented in the Optical Transport Manager for WDM.

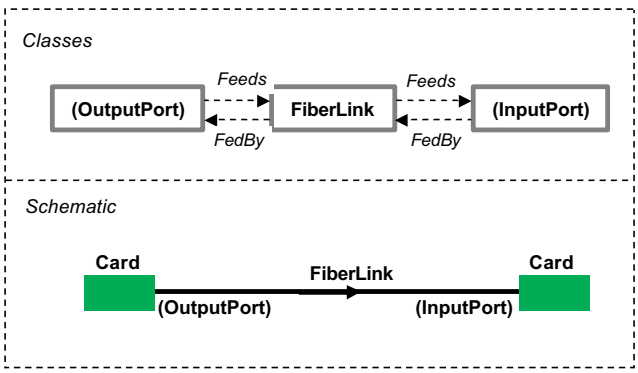

Figure 32 FiberLink relationship with ports

FiberLink used in modeling band-multiplexer

Band-multiplexers are used to combine two blocks of wavelengths on two separate fibers onto a single fiber. Band-multiplexers are not represented directly in the Optical Transport Manager for WDM because they do not have alarms raised on them. However, two groups of wavelengths combined on a single fiber are represented. The model represents the fiber between the band-multiplexer and band-demultiplexer ports as a FiberLink that has a *LayeredOver* relationship with the FiberLinks that connect the transmit and receive amplifiers for each band. These relationships distinguish between a problem on a fiber relating to a single band and a problem on the combined link.

Figure 33 on page 59 shows the logical and physical relationships for Band-Multiplexer/Demultiplexer ports.

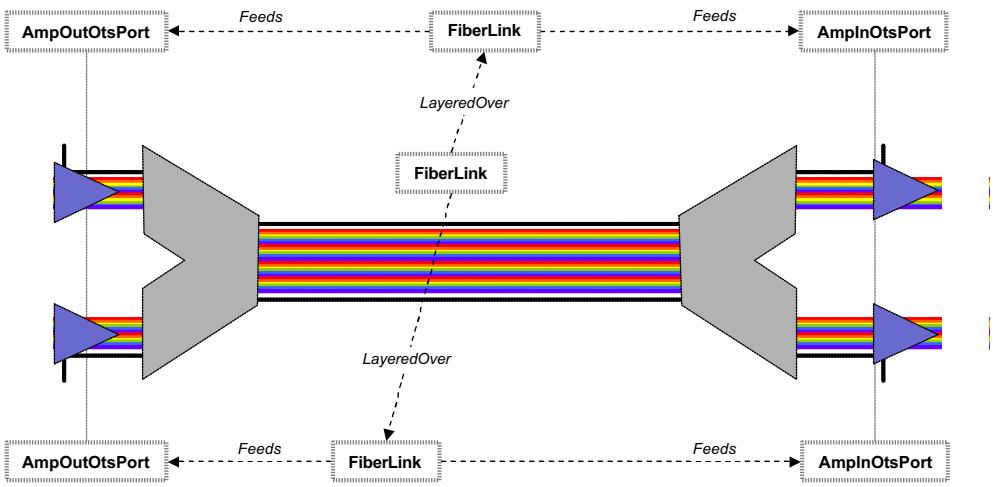

Figure 33 Classes used to represent band-multiplexer/demultiplexer configuration

OchLink and OcnLink

OchLink and OcnLink classes represent logical connections that pass through multiple WDM components at the OCH and OCN layers respectively.

Figure 34 on page 59 shows the classes and relationships used for the OchLink and OcnLink classes.

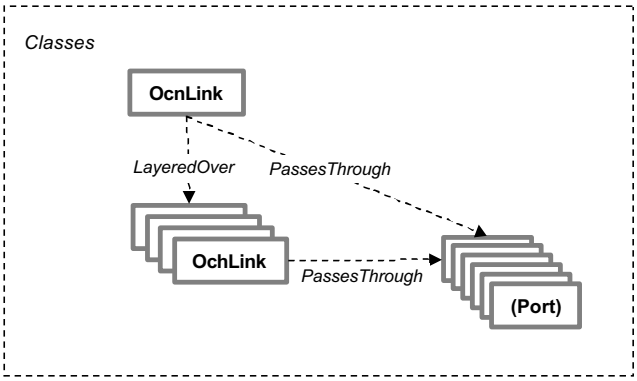

Figure 34 Classes and relationships for OchLink and OcnLink classes

TopologicalLink (and PTP)

The TopologicalLink class represents bidirectional connections carried across devices in the WDM network that appear in the transported protocol to be carried by a single fiber. When cross-domain correlation is performed between SONET/SDH and WDM, these objects are imported from the Optical Transport Manager for SONET/SDH to the Optical Transport Manager for WDM. "Cross-domain correlation" on page 88 provides more information.

Figure 35 on page 60 shows the classes and relationships used for the TopologicalLink class and for the PTP objects that represent the ports at each end of the link.

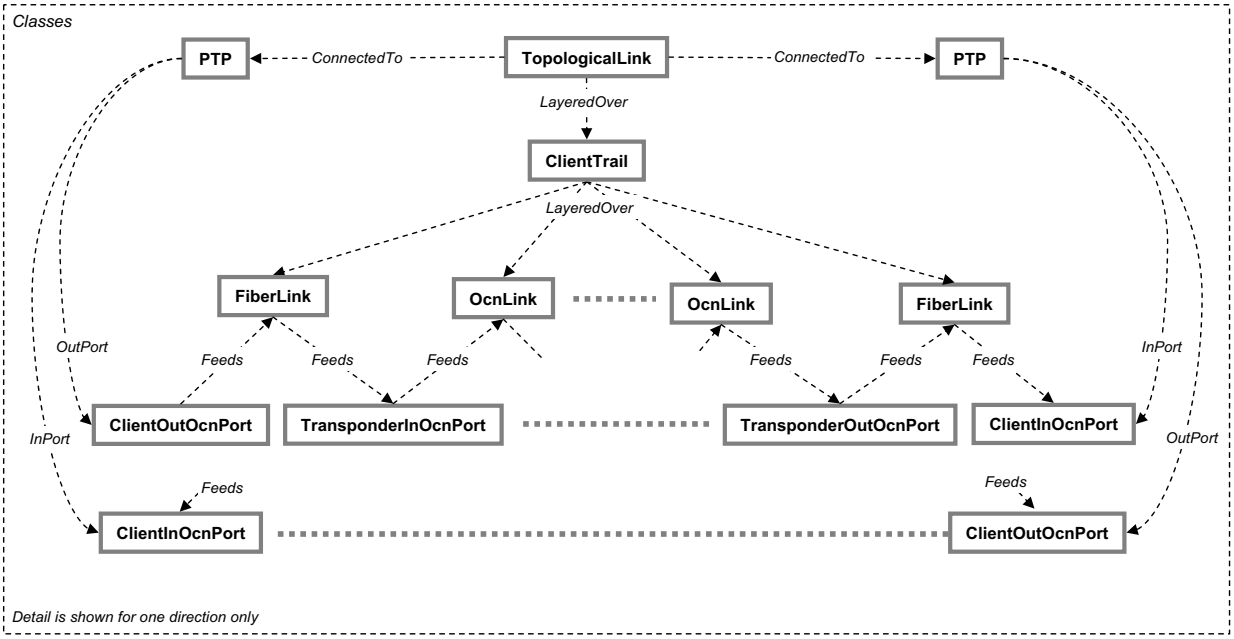

Figure 35 TopologicalLink and PTP classes

Note: The input and output ports that make up PTPs are on devices that are not managed by the Optical Transport Manager for WDM. Their presence is inferred, and their names are calculated values that are not related to the names that these ports may have in the EMS for a SONET/SDH network whose links are carried over WDM. The objects corresponding to these ports are used during cross-domain correlation only.

Figure 36 on page 61 shows the physical relationships for a topological link and the associated PTPs.

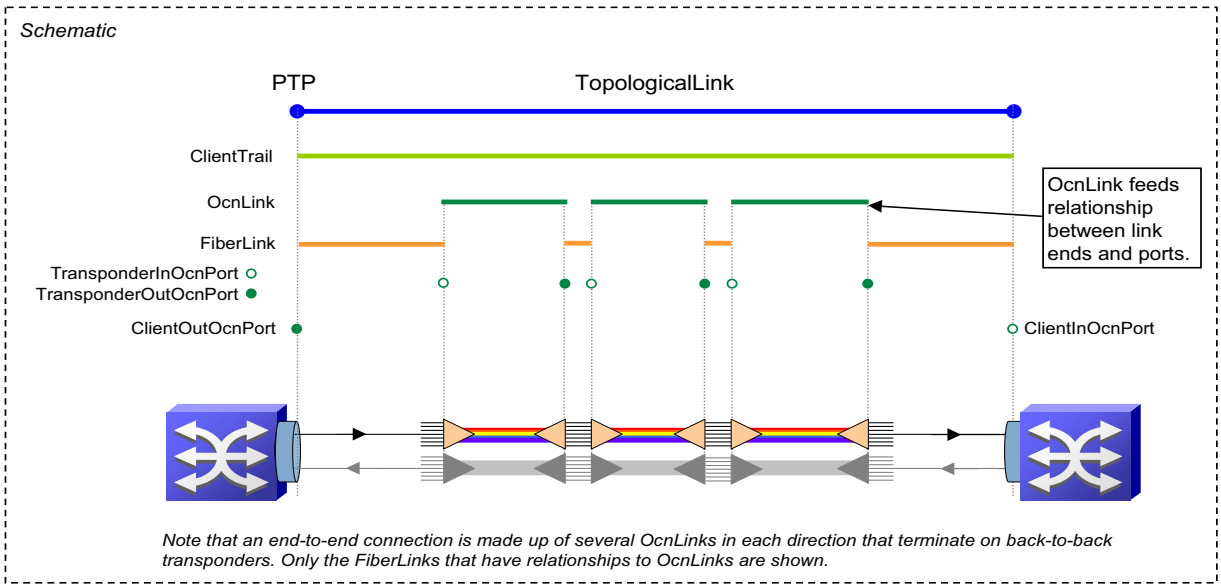

Figure 36 Physical relationships for a Topological link and PTPs

ClientTrail and ClientCircuit classes

ClientTrails and ClientCircuits are supported for WDM. The ClientCircuits are the end-to-end circuits that traverse the WDM domain. The ClientTrails are the trails that are used to carry the ClientCircuits. ClientTrails can also carry TopologicalLinks.

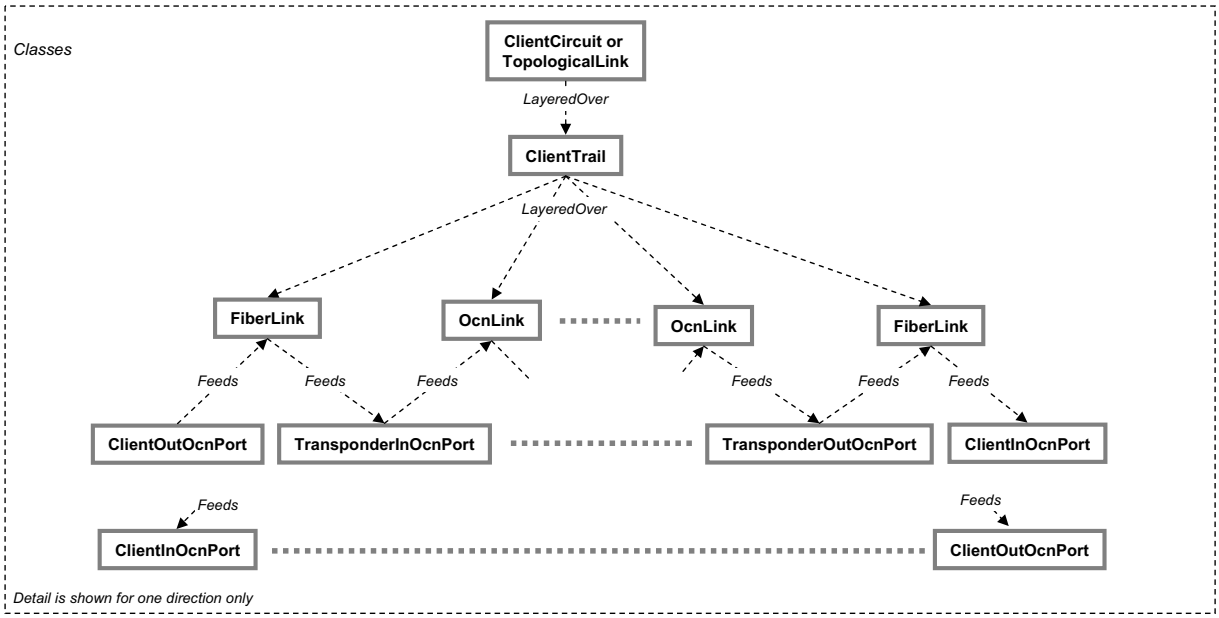

Figure 37 ClientCircuit and ClientTrail relationship

A single ClientCircuit or TopologicalLink can ride over multiple ClientTrails.

Failures in the WDM domain will propagate to the ClientTrails and then to the ClientCircuit or TopologicalLink, thus tying root cause to service impact.

Wavelength service

Wavelength service is modeled as a specialized logical connection using the ClientCircuit entity. Wavelength service is carried over several other logical and physical entities. A failure in any one or more of these entities will cause the wavelength service to be down.

A failure or fault event in any object underlying the wavelength service is propagated through all layers up to the wavelength service, the ClientCircuit entity. The ServiceUnavailable event will show the underlying fault or failure as the root cause of the problem.

Wavelength service, the ClientCircuit, typically rides over one or more ClientTrails. While the ClientCircuit represents user's end-to-end connection, the ClientTrail is used for internal logical connections within the network.

As shown in Figure 38 on page 62, underlying the ClientTrail is the OcnLink. An OcnLink is layered over OchLinks connecting multiplexers and demultiplexers. OchLinks are layered over one or more FiberLinks which represent the lowest physical layer.

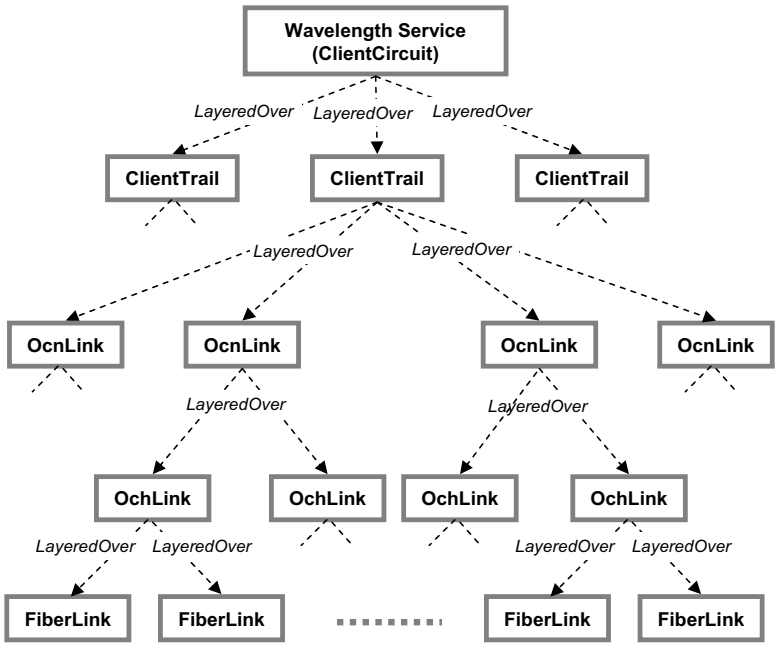

Figure 38 Classes and relationships in wavelength service

Abstract entities

PassiveFiberLink

The PassiveFiberLink is an abstract entity that allows OTM to distinguish inter-network-element fiber link failures from intra-network-element errors.

A PassiveFiberLink entity is created directly connecting each pair of transponder OCH ports. As shown in Figure 39 on page 63, the two start and end intra-network-element FiberLinks underlay their corresponding PassiveFiberLink. While the four (or eight) PassiveFiberLinks, carried by the passive filter, underlay the inter-network-element FiberLink.

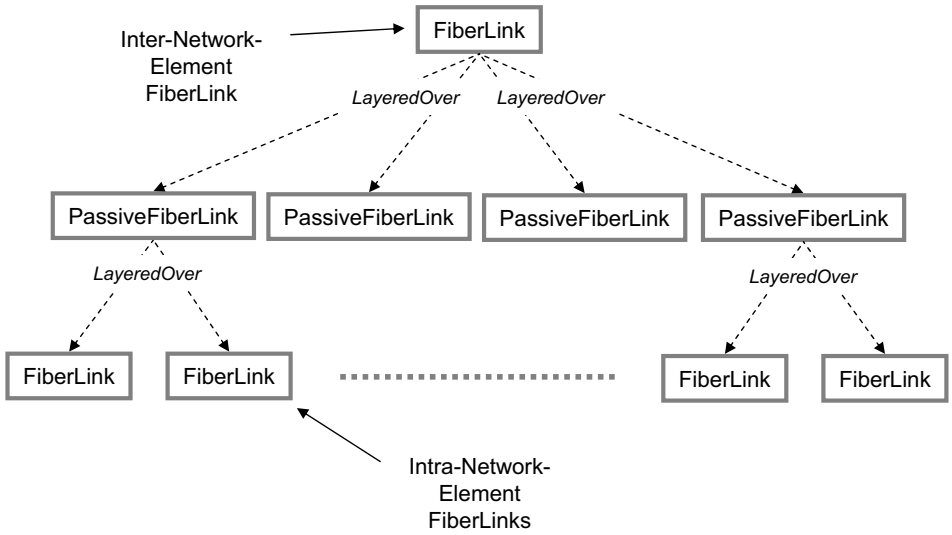

Figure 39 Inter- and Intra-network-element FiberLinks and PassiveFiberLinks

PassiveFiberLinks can generate a LineFailure alarm. The relationships shown in Figure 39 on page 63 allow OTM to distinguish between a problem on a single, internal fiber and a problem on the combined fiber linking the network elements.

When the intra-network-element FiberLink is cut, there are multiple LineFailure alarms received on the PassiveFiberLinks.

When a single enter-network-element FiberLink is cut, only one PassiveFiberLinks receives a LineFailure alarm and the system points to the enter-network-element FiberLink as the root cause of the alarm.

CHAPTER 5
Classes and Relationships for WDM-NG

This chapter describes the elements discovered and managed in WDM networks by the Optical Transport Manager Next Generation WDM Manager (WDM-NG).

Topics in this chapter include:

- About the Next Generation WDM model 66
- Next Generation WDM object classes in Optical Transport Manager 66

About the Next Generation WDM model

The Optical Transport Manager for Next Generation WDM uses object classes to represent each type of topological element present in the WDM network being managed. Unlike the legacy WDM Manager, the Next Generation WDM Manager model is based on the TMF-864 standard, which follows a different representation of topological elements than the TMF-814 model. The topology is used to build the codebook, which is the basis for root-cause analysis.

Next Generation WDM object classes in Optical Transport Manager

Table 6 on page 66 lists the classes used in the Next Generation WDM object model of the Optical Transport Manager. These classes are visible in the Global Console when it connects to an instance of the Optical Transport Manager.

Table 6 Next Generation WDM object classes

Category	Class	Description
EMS	EMS	The Element Management System.
Physical Equipment	OpticalNetworkElement	Device supporting WDM.
	Shelf	Physical container which holds the equipment.
	Equipment	The manageable physical components of an OpticalNetworkElement such as circuit packs, fans, power supply units and any other type of replaceable unit.
Ports	PTP	Physical T ermination Point. End point of a physical connection.
Physical Connections	TopologicalLink	A physical connection, such as a fiber link, that connects to another device managed by the Optical Transport Manager. This can be used to represent unidirectional or bidirectional connections.
	DropsideTopologicalLink	A physical connection, such as a fiber link, that connects a device managed by the Optical Transport Manager to another device that is not managed by the Optical Transport Manager.
Logical Ports	CTP	Connection Termination Point. End point of a logical connection.

Table 6 Next Generation WDM object classes

Category	Class	Description
Logical Connections	Route	A logical connection that represents a SubnetworkConnection route.
	SubnetworkConnection	A logical connection that crosses a subnetwork.
	Client Trail	A logical connection across a network that may cross one or more subnetworks
	ClientCircuit	An end-to-end connection across a network that may cross several subnetworks. This entity is used to represent client services.
Protection	ProtectionGroup	A redundancy group of PTPs.

CHAPTER 6
Notifications and Impacts for SONET/SDH Networks

This chapter describes the notifications generated by the Optical Transport Manager for SONET/SDH networks and the symptomatic events it diagnoses.

Topics covered in this chapter include:

- About Optical Transport Manager notifications 70
- Notifications and symptomatic events 70
- Impact analysis..... 74

About Optical Transport Manager notifications

Optical Transport Manager for SONET/SDH describes the failures diagnosed for each element in SONET/SDH networks. The Optical Transport Manager calculates which root-cause problems are causing symptomatic events and creates notifications for the problem origin. The Optical Transport Manager uses the relationships in the topology to calculate the impact that a root-cause problem in one element has on the elements and services that are connected to, or depend on it.

When the Optical Transport Manager receives alarms that relate to connections to elements that it does not manage, the Optical Transport Manager performs special analysis to determine if a problem has occurred in the connected network. This is described in "Diagnosis of external failure" on page 73.

"Protection Schemes" on page 95 provides detailed information about the protection schemes supported by the Optical Transport Manager.

Notifications and symptomatic events

Table 7 on page 70 lists the notifications generated by the Optical Transport Manager for optical network elements and network connections for SONET/SDH networks.

Table 7 Notifications Generated by the Optical Transport Manager

Managed Element	Notification	Condition
Card or Equipment	Down	A Card or Equipment device in a network element has failed.
PTP	Down	A PTP on a network element has failed.
	PTPHardFailureCondition	A hard failure indication has been observed on this PTP.
OpticalNetworkElement	Down	The EMS has lost management connection with the NE.
TopologicalLink	Down	No traffic is passing through the link in one or both directions and symptoms may indicate fiber failure.
	SignalDegrade	Traffic is passing through the link but symptoms indicate that the signal is degraded.
DropSideTopologicalLink	Down	The drop side topological link is down.
	SignalDegrade	A signal degrade (soft failure) occurs when the signal error rate reaches a threshold. The impact is a function of the device specification; however, if there is an impact, it will be very similar to Fiber Cut.
Conduit	Down	No traffic is passing through the link in one or both directions and symptoms may indicate fiber failure. Physical failure of the link bundle that comprises topological links.
BBTopologicalLink	Down	No traffic is passing through the unmanaged segment in one or both directions.
	SignalDegrade	Traffic is passing through the link but symptoms indicate that the signal is degraded.

Table 7 Notifications Generated by the Optical Transport Manager

Managed Element	Notification	Condition
BBDropSideTopologicalLink	Down	The edge, unmanaged segment is down.
	SignalDegrade	A signal degrade (soft failure) occurs when the signal error rate reaches a threshold. The impact is a function of the device specification; however, if there is an impact, it will be very similar to Fiber Cut.
HighOrder_Trail	TrailDown	This facility is down.
	TrailAtRis	One element of a protection group is down. Communication continues, but without the security of redundancy.
HighOrder_Circuit	ServiceUnavailable	This facility is down. May be a result of TransportOutgoingFail, TransportIncomingFail, or TransportFail.
	ServiceAtRisk	One element of a protection group is down. Communication continues, but without the security of redundancy.
EMS	Disconnected	There is a loss of communication with the EMS.
	EmsAdapterNotRunning	The EMC Smarts EMS adapter has shut down.
	EmsAdapterDisconnected	The EMC Smarts EMS adapter is not responding.

The following sections describe the root-cause problems and related symptoms for some optical network elements and network connections.

Root-cause problems for SONET/SDH network elements

The Optical Transport Manager diagnoses the following root-cause problems for optical network elements in SONET/SDH networks:

- Card Down
- Equipment Down
- PTP Down
- OpticalNetworkElement Down

Card Down or Equipment Down

Down indicates that the Card or Equipment in a network element has failed. A card or equipment failure causes all PTPs on the device to fail to pass traffic.

The symptomatic events for Card Down or Equipment Down include:

- Alarm from a network element indicating Card or Equipment failure.
- Loss of Signal (LOS) or Loss of Frame (LOF) on the PTPs that are directly connected to the PTPs contained in the failed Card or Equipment.

- Remote Failure Indication (RFI) on PTP objects that represent the end points on which the client connections that pass through the network element enter and exit the network. Note that the Optical Transport Manager interprets RAIs (Remote Alarm Indications) and RFIs from digital links as RemoteIndications.
- LOS and/or LOF for downstream PTP objects that are directly connected to ports on the failed Card or Equipment.

PTP Down

Down indicates that a PTP is failing to pass traffic. Each PTP object represents a pair of transmit and receive ports on the network element. The symptoms seen from the network differ depending on which PTP has failed.

The symptomatic events for Down when a transmitter has failed include:

- Card or Equipment alarm from network element indicating transmitter failure.
- LOS or LOF on the PTP that is directly connected to the failed PTP.
- RFI on CTP objects that represent the end points on which the client connections that pass through the network element enter and exit the network. The Optical Transport Manager interprets RAIs and RFIs from digital links as RemoteIndications.

The symptomatic events for Down when a receiver has failed include:

- Card or Equipment alarm from network elements indicating receiver failure.
- RFI on downstream CTP objects that represent the end points on which the client connections that pass through the network element enter and exit the network. The Optical Transport Manager interprets RAIs and RFIs from digital links as “zz.”

OpticalNetworkElement Down

Down indicates that the Optical Network Element has failed. The symptomatic events for a Down condition when an optical network element has failed include:

- CommunicationState Unavailable alarm from the Network Element indicating that the communication to that OpticalNetworkElement has been lost.
- LOS or LOF on the all the PTPs of the neighboring OpticalNetworkElements that are connected to the failed Network Element.

Root-cause problems for SONET/SDH network connections

The Optical Transport Manager diagnoses root-cause problems for the following SONET/SDH network connections:

- TopologicalLink Down
- TopologicalLink SignalDegrade
- BBTopologicalLink Down
- BBDropSideTopologicalLink Down

TopologicalLink Down

Down indicates that the SONET/SDH line in at least one direction on a bidirectional link is degraded to the point of no longer passing traffic.

The East/West directionality for each topological link is determined during discovery.

The symptoms for TopologicalLink Down are as follows:

- LOS from downstream PTP connected to the TopologicalLink
- RFI for the upstream PTP connected to the TopologicalLink
- Signal Failure (SF) on the receiving PTP connected to the TopologicalLink

TopologicalLink SignalDegrade

SignalDegrade indicates that traffic is passing through the link but symptoms indicate that the signal is degraded.

The symptom for TopologicalLink SignalDegrade is as follows:

- Signal Degrade (SD) on the receiving PTP connected to the TopologicalLink

BBTopologicalLink Down

Down indicates that the SONET/SDH connection through the black box in at least one direction on a bidirectional link is degraded to the point of no longer passing traffic.

The aEnd/zEnd directionality for each topological link is determined by the API parameters when the black box is created.

The symptoms for BBTopologicalLink Down are as follows:

- LOS from downstream PTP connected to the BBTopologicalLink
- LOF from downstream PTP connected to the BBTopologicalLink
- RDI on the upstream PTP connected to the BBTopologicalLink
- AIS on the downstream PTP connected to the BBTopologicalLink

BBTopologicalLink SignalDegrade

SignalDegrade indicates that traffic is passing through the black box but symptoms indicate that the signal is degraded.

The symptom for BBTopologicalLink SignalDegrade is as follows:

- Signal Degrade (SD) on the receiving PTP connected to the BBTopologicalLink

Diagnosis of external failure

When the Optical Transport Manager receives alarms that relate connections from network elements managed by the Optical Transport Manager to those that are not managed by the Optical Transport Manager, special analysis is performed to determine if a problem has occurred in the connected network rather than in the managed network.

This additional analysis is performed for drop side topological links that have a Down notification. The following alarms are used in determining the existence of an external failure.

- LOS on the PTP connected to a DropSideTopologicalLink or BBDropSideTopologicalLink
- LOF on the PTP connected to a DropSideTopologicalLink or BBDropSideTopologicalLink

- AIS on the PTP connected to a DropSideTopologicalLink or BBDropSideTopologicalLink
- RFI on the PTP connected to a DropSideTopologicalLink
- RFI-P on the aEnd or zEnd CTP
- LOP-P on the aEnd or zEnd CTP
- AIS-P on the aEnd or zEnd CTP
- UNEQ-P on the aEnd or zEnd CTP
- TIM-P on the aEnd or zEnd CTP
- PLM-P on the aEnd or zEnd CTP
- PDI-P on the aEnd or zEnd CTP
- SSF-P on the aEnd or zEnd CTP

When analysis shows that an external failure has occurred, two user-defined attributes are updated to show where the failure has occurred.

The UserDefined1 attribute can take one of the following values:

- zEnd Customer Network - External Failure
- Service Provider Network - Internal Failure
- aEnd Customer Network - External Failure

Impact analysis

When the Optical Transport Manager diagnoses a problem, it considers the impact of a failure on other network elements or network connections by following certain relationships in the topology. The Optical Transport Manager propagates impacts through the topology along the Underlying and ComposedOf relationships.

Impact analysis performs two functions:

- Correlates alarms that are a result of the underlying root cause problem and labels them in the notification as impacts, by setting their Category attribute to Impact.
- Creates ServiceUnavailable notifications for circuits where traffic is no longer flowing because of one or more problems along its path.

Impact correlation

When the Optical Transport Manager performs root-cause analysis, it uses only a subset of the alarms that result from a given failure as symptoms. The Optical Transport Manager identifies the other alarms that occur as impacts of the root-cause problem. For instance, a line failure that occurs when a fiber is cut has the symptoms, LOS on the downstream PTP, and RDI-L on the upstream PTP. In addition, AIS-L, RDI-L, AIS-P and RDI-P alarms occur at various points along all paths that pass through the cut fiber. The Optical Transport Manager identifies all of these resulting alarms as impacts of the Down notification on the TopologicalLink that models the cut fiber.

In the case of an Card or Equipment failure, the Optical Transport Manager identifies the resulting UNEQ-P alarms as impacts.

Impact notifications

When the Optical Transport Manager diagnoses a root cause problem, it calculates whether the problem has caused service to be lost on end-to-end circuits that depend on the affected object. When service has been lost, the Optical Transport Manager creates the following notification:

- ServiceUnavailable on Circuit object

For more information about how the Optical Transport Manager deals with protection, see "Protection Schemes" on page 95.

Table 8 on page 75 shows the context in which the Optical Transport Manager generates ServiceUnavailable root-cause notifications for circuits when there is either no protection, or multiple failures prevent successful protection switching.

Table 8 Impact of failures on circuits when protection is unavailable

Root-cause Notification	Element	Context
Down	Card or Equipment	Circuits passing through the Card or Equipment depending on it.
Down	PTP	Circuits passing through the PTP.
Down or SignalDegrade	TopologicalLink	Circuits passing through the TopologicalLink.
Down or SignalDegrade	DropSideTopologicalLink	Circuits connected to the DropSideTopologicalLink
Down or SignalDegrade	BBTopologicalLink	Circuits passing through the BBTopologicalLink.
Down or SignalDegrade	BBDropSideTopologicalLink	Circuits connected to the BBDropSideTopologicalLink
Down	HighOrder_Circuit	A optical network object reports TransportOutgoingFail, TransportIncomingFail, or TransportFail notifications.

CHAPTER 7
Notifications and Impacts for PDH Networks

This chapter describes the notifications generated by the Optical Transport Manager for PDH networks and the symptomatic events it diagnoses.

Topics covered in this chapter include:

- About Optical Transport Manager for PDH notifications 78
- Notifications and symptomatic events 78
- Impact analysis..... 81

About Optical Transport Manager for PDH notifications

Optical Transport Manager for PDH describes the failures diagnosed for each low-order element in the SDH network. Optical Transport Manager for PDH cross-correlates with Optical Transport Manager for SONET/SDH to calculate which root-cause problems are causing symptomatic events and creates notifications for the problem origin. The Optical Transport Manager uses the relationships in the topology to calculate the impact that a root-cause problem in one element has on the elements and services that are connected to, or depend on it.

When the Optical Transport Manager receives alarms that relate to connections to elements that it does not manage, the Optical Transport Manager performs special analysis to determine if a problem has occurred in the connected network. This is described in "Diagnosis of external failure" on page 80.

"Protection Schemes" on page 95 provides For detailed information about the protection schemes supported by the Optical Transport Manager.

Notifications and symptomatic events

Table 9 on page 78 lists the notifications generated by the Optical Transport Manager for low-order optical network elements and network connections in the SDH network.

Table 9 Notifications Generated by the Optical Transport Manager

Managed Element	Notification	Condition
Card	Down	A card in a network element has failed.
Equipment	Down	Equipment in a network element has failed.
PTP	Down	A PTP on a network card or equipment has failed.
	PTPHardFailureCondition	A hard failure indication has been observed on this PTP.
OpticalNetworkElement	Down	The EMS has lost management connection with the NE.
DropSideTopologicalLink	Down	The drop side topological link is down.
HighOrder_Trail	TrailDown	This facility is down.
	TrailAtRisk	One element of a protection group is down. Communication continues, but without the security of redundancy.
LowOrder_Circuit	ServiceUnavailable	This facility is down. May be a result of TransportOutgoingFail, TransportIncomingFail, or TransportFail.
	ServiceAtRisk	One element of a protection group is down. Communication continues, but without the security of redundancy.

The following sections describe the root-cause problems and related symptoms for optical network elements and network connections.

Root-cause problems for PDH network elements

The Optical Transport Manager for PDH diagnoses the following root-cause problems for low-order optical network elements in the SDH network:

- Card Down
- Equipment Down
- PTP Down

Card Down or Equipment Down

Down indicates that a card or equipment in a network element has failed. A Card or Equipment failure causes all PTPs on the device to fail to pass traffic.

The symptomatic events for Card Down or Equipment Down include:

- Alarm from a network element indicating Card or Equipment failure
- Remote Failure Indication (RFI) on PTP objects that represent the end points on which the client connections that pass through the network element enter and exit the network. Note that the Optical Transport Manager interprets RAIs (Remote Alarm Indications) and RFIs from digital links as RemoteIndications.

PTP Down

Down indicates that a PTP has failed; that is, the PTP is failing to pass traffic. Each PTP object represents a pair of transmit and receive ports on the network element. The symptoms seen from the network differ depending on which PTP has failed.

The symptomatic events for Down when a transmitter has failed include:

- Alarm from network element indicating transmitter failure.
- RFI on CTP objects that represent the end points on which the client connections that pass through the network element enter and exit the network. The Optical Transport Manager interprets RAIs and RFIs from digital links as RemoteIndications.

The symptomatic events for Down when a receiver has failed include:

- Alarm from network elements indicating receiver failure.
- RFI on downstream CTP objects that represent the end points on which the client connections that pass through the network element enter and exit the network. The Optical Transport Manager interprets RAIs and RFIs from digital links as “zz.”

OpticalNetworkElement Down

Down indicates that the Optical Network Element has failed. The symptomatic events for a Down condition when an optical network element has failed include:

- CommunicationState Unavailable alarm from the Network Element indicating that the communication to that OpticalNetworkElement has been lost.
- LOS or LOF on the all the PTPs of the neighboring OpticalNetworkElements that are connected to the failed Network Element.

Root-cause problems for PDH network connections

The Optical Transport Manager for PDH diagnoses root-cause problems for the following loworder SDH network connections:

- DropSideTopologicalLink

The Optical Transport Manager diagnoses the following root-cause problems for DropSideTopologicalLink objects.

- Down

DropSideTopologicalLink Down

Down indicates that the connection in at least one direction on a bidirectional link is degraded to the point of no longer passing traffic.

The East/West directionality for each topological link is determined during discovery.

The symptoms for DropSideTopologicalLink Down are as follows:

- LOS on the PTP connected to the DropSideTopologicalLink
- RFI on the PTP connected to the DropSideTopologicalLink
- Signal Failure (SF) on the receiving PTP connected to the DropSideTopologicalLink

Diagnosis of external failure

When the Optical Transport Manager for PDH receives alarms that relate connections from network elements it manages to those it does not manage, special analysis is performed to determine if a problem has occurred in the connected network rather than in the managed network.

This additional analysis is performed for circuits that have a Down notification. The following alarms are used in determining the existence of an external failure. These alarms may be applied to CTPs at various rates (for example, VC12, VC11, E1).

- LOP on the aEnd or zEnd CTP
- AIS on the aEnd or zEnd CTP
- UNEQ on the aEnd or zEnd CTP
- TIM on the aEnd or zEnd CTP
- PLM on the aEnd or zEnd CTP
- PDI on the aEnd or zEnd CTP
- SSF on the aEnd or zEnd CTP
- HighOrder_Trail TrailDown and TrailAtRisk alarms where the failed end cannot be determined

When analysis shows that an external failure has occurred, the UserDefined1 attribute is updated to show where the failure has occurred.

The UserDefined1 attribute can take one of the following values:

- zEnd Customer Network - External Failure

- Service Provider Network - Internal Failure
- aEnd Customer Network - External Failure
- Customer Network - External Failure

  Customer Network - External Failure is a special case of DropSideTopologicalLink Down where the end location of the external failure cannot be determined.

Impact analysis

When the Optical Transport Manager diagnoses a problem, it considers the impact of a failure on other network elements or network connections by following certain relationships in the topology. The Optical Transport Manager propagates impacts through the topology along the Underlying and ComposedOf relationships.

Impact analysis performs two functions:

- Correlates alarms that are a result of the underlying root cause problem and labels them in the notification as impacts, by setting their Category attribute to Impact.
- Creates ServiceUnavailable notifications for circuits where traffic is no longer flowing because of one or more problems along its path.

Impact correlation

When the Optical Transport Manager performs root-cause analysis, it uses only a subset of the alarms that result from a given failure as symptoms. The Optical Transport Manager identifies the other alarms that occur as impacts of the root-cause problem. For instance, a line failure that occurs when a fiber is cut has the symptoms, LOS on the downstream PTP, and RDI-L on the upstream PTP. In addition, AIS-L, RDI-L, AIS-P and RDI-P alarms occur at various points along all paths that pass through the cut fiber. The Optical Transport Manager identifies all of these resulting alarms as impacts of the Down notification on the TopologicalLink that models the cut fiber.

Impact notifications

When the Optical Transport Manager diagnoses a root cause problem, it calculates whether the problem has caused service to be lost on end-to-end circuits that depend on the affected object. When service has been lost, the Optical Transport Manager creates the following notification:

- ServiceUnavailable on Circuit object

“Protection Schemes” on page 95 provides more information.

Table 10 on page 82 shows the context in which the Optical Transport Manager generates ServiceUnavailable root-cause notifications for circuits when there is either no protection, or multiple failures prevent successful protection switching.

Table 10 Impact of failures on circuits when protection is unavailable

Root-cause Notification	Element	Context
Down	Card or Equipment	Circuits passing through or depending on the Card or Equipment
Down	PTP	Circuits passing through the PTP.
Down or SignalDegrade	DropSideTopologicalLink	Circuits passing through the TopologicalLink.

CHAPTER 8
Notifications and Impacts for WDM Networks

This chapter describes problems diagnosed for each element in WDM networks. Topics covered in this chapter include:

- Optical Transport Manager analysis for WDM networks 84
- Root-cause notifications for WDM Manager 84
- Impact analysis 85

Optical Transport Manager analysis for WDM networks

The Optical Transport Manager calculates which root-cause problems are causing symptomatic events and creates notifications for the problem origin. The Optical Transport Manager uses the relationships in the topology to calculate the impact that a root-cause problem in one element has on the elements and services that are connected to, or depend on it.

Root-cause notifications for WDM Manager

Table 11 on page 84 lists the root-cause notifications generated by the Optical Transport Manager for optical network elements and network connections in WDM networks.

Table 11 Notifications generated by Optical Transport Manager

Managed Element	Notification	Description
Card	CardFailure	Replaceable unit problem
	CardRemoval	Improper removal
	CardFailure	Dcc failure
Transponder	CardFailure	Replaceable unit problem
	CardRemoval	Improper removal
Amplifier	CardFailure	Replaceable unit problem
	CardRemoval	Improper removal
	CardFailure	Forced laser shutdown
PTP	PTPHardFailureCondition	PTPHardFailureCondition up on the topological link
Port (can be declared on any type of output port)	PortFailure	Transmit failed
OpticalNetworkElement	AtRisk	Fan or power supply failure when backup is provided and still working.
AmpOutOtsPort	CardFailure	Laser temperature or bias problem
AmpOutOmsPort	CardFailure	Laser temperature or bias problem
TransponderOutOcnPort	CardFailure	Laser temperature or bias problem
TransponderOutOchPort	CardFailure	Laser temperature or bias problem
Transponder Module	ModuleDown	Transmit failed, Improper removal or Internal link failure. (This applies to a special class of Transponder Modules such as the OC192_Transmit Transponder_NEC64 and OC192_Receive Transponder_NEC64.)
FiberLink (OCN)	LineFailure	Loss of signal
	LineFailure	Loss of frame
	SignalDegrade	Signal degrade

Table 11 Notifications generated by Optical Transport Manager (continued)

Managed Element	Notification	Description
FiberLink (OCH)	LineFailure	Loss of signal
	SignalDegrade	Signal degrade
FiberLink (OMS)	LineFailure	Loss of signal Reflection power
FiberLink (OTS)	LineFailure	Loss of continuity Loss of signal
	SignalDegrade	Signal degrade
BBFiberLink (OCN)	LineFailure	Loss of signal Loss of frame Alarm Indication Signal, Line level
WssModule	CardFailure	Replaceable unit problem
	CardRemoval	Improper removal
OcmModule	CardFailure	Replaceable unit problem
	CardRemoval	Improper removal
ControlModule	CardFailure	Replaceable unit problem
	CardRemoval	Improper removal
MuxModule	CardFailure	Replaceable unit problem
	CardRemoval	Improper removal
PassiveFiberLink	LineFailure	Loss of signal

Impact analysis

When the Optical Transport Manager performs impact analysis, it does the following:

- Correlates alarms that result from an underlying root-cause problem and labels them in the notification as impacts, by setting their Category attribute to Impact.
- Creates Down notifications for end-to-end TopologicalLinks where traffic is no longer flowing because of one or more problems along its path.

These functions are described in more detail in the following sections.

Impact correlation

When problems occur in a WDM network, many alarms are generated as a result. For instance, if a fiber goes down inside a network element, there may be an LOS generated at a downstream circuit pack, and up to 80 LOS alarms generated on transponders whose input signals are carried by the fiber. If wavelengths have been added and dropped along the light path, these alarms can occur at various point across the network. The Optical

Transport Manager uses the local LOS alarm as a symptom of the root-cause problem (WdmLink Down) and identifies the transponder LOS alarms as being impacts of the underlying root-cause problem.

Table 12 on page 86 lists the events that can appear as symptoms and/or impacts of root-cause notifications.

Table 12 Symptom and impact events

Object	Event	Description
TransponderInOcnPort, TransponderOutOcnPort	LofEvent	Loss of frame
TransponderInFecPort	FecLofEvent	Loss of FEC frame
Any Input Port	LosEvent	Loss of signal
AmpInOtsPort	LocEvent	Loss of continuity
Any Output Port	OutFailEvent	Transmit failed
Any Input/Output Port	SignalDegradeEvent	Signal Degrade
Any Output port of an amp or a transponder	LaserTemperatureEvent	Laser Temperature
Any Output port of an amp or a transponder	LaserBiasEvent	Laser Bias Current Level
AmpOutOtsPort	AprEvent	Automatic Power Reduction
TransponderInFecPort	AisEvent	Forward Defect Indication
TransponderInFecPort	BdiEvent	Backward Defect Indication
AmpOutOtsPort	ForcedShutdownEvent	Forced Laser shutdown
Any Card	CardRemovalEvent	Improper Removal
AmpOutOtsPort AmpOutOmsPort	ReflectionEvent	Reflection Power
AmpOutOtsPort AmpOutOmsPort	ShutdownEvent	Laser shutdown
Any Card	CardFailureEvent	Replaceable Unit Problem
AmpOutOscPort AmpInOscPort The DCC card (e.g., AUXA)	DccFailureEvent	DCC Failure
OC192_TransmitTransponder_NEC64	OCHTRemovedEvent OCLTRemovedEvent FECTRemovedEvent	Improper Removal
OC192_TransmitTransponder_NEC64	OCHTFailedEvent OCLTFailedEvent FECTFailedEvent	Transmit Failed
OC192_TransmitTransponder_NEC64	OCLTToFECTLinkFailedEvent FECTToOCHTLinkFailedEvent	Internal Link Failure

Table 12 Symptom and impact events (continued)

Object	Event	Description
OC192_ReceivetTransponder_NEC64	OCHRRemovedEvent OCLRRemovedEvent FECRRemovedEvent	Improper Removal
OC192_ReceivetTransponder_NEC64	OCHRFailedEvent OCLRFailedEvent FECRFailedEvent	Transmit Failed
OC192_ReceivetTransponder_NEC64	OCHRToFECRLinkFailedEvent FECRToOCLRLinkFailedEvent	Internal Link Failure

Impact notification

In order to facilitate cross-domain correlation with SONET/SDH, the Optical Transport Manager for WDM identifies which end-to-end TopologicalLink objects have lost service due to a root-cause problem. These TopologicalLink objects will correspond to links in the SONET/SDH model where WDM is being used as a transport. Cross-domain correlation is explained more fully in "Cross-domain correlation" on page 88.

A Down notification is created on a TopologicalLink when any of the ClientTrail objects that the ToplogicalLink is LayeredOver are marked Down.

Enhanced Card Level Impact

Optical Transport Manager supports additional Card level event to categorize between service affecting (SA) and non-service affecting (NSA).

Table 13 ServiceAffecting events and NonServiceAffecting events

Category	CardAlarmType	Problem	Event
ServiceAffecting	CARD_FAIL	CardDown	CardUnavailable
	CARD_REMOVED		
	CARD_MISMATCH		
	AMP_INTERNAL_SHUTDOWN		
	DCF_LOS		
	DCF_OUTFAIL		
	AMP_INTERNAL_REFLECTION		
	AMP_FORCED_LASER_SHUTDOWN		
	AMP_LASER_TEMPERATURE		
	AMP_LASER_BIAS		
NonServiceAffecting	SV_LOS	ImProperCardState	CardConditionInappropriate
	OSC_INTERNALLINKFAIL		

ServiceAffecting events have impact on Services that passes through components while NonServiceAffecting events does not have such impacts.

Cross-domain correlation

The Optical Transport Manager performs the following cross-domain correlation calculations:

- Explanation of a SONET/SDH TopologicalLink Down as being an impact of an underlying WDM root-cause problem
- Explanation of alarms in WDM as being caused by a problem in SONET/SDH

These calculations are described in more detail in the following sections.

Explanation of SONET/SDH TopologicalLink Down

The Optical Transport Manager for WDM can be configured to receive TopologicalLink Down notifications from the Optical Transport Manager for SONET/SDH. When these are received, the Optical Transport Manager for WDM determines if the received notification corresponds to an impact notification it has calculated. If the notifications correspond, the root-cause of the impact notification is marked as the root-cause of the notification that came from the Optical Transport Manager for SONET/SDH, and this information is passed to Service Assurance Manager. In this case, the alarm repository in Service Assurance Manager shows that what appeared to be a problem in SONET/SDH was in fact caused by a root-cause problem in WDM.

Explanation of alarms in WDM as being caused by a problem in SONET/SDH

When a problem occurs in the SONET/SDH network feeding a WDM network, the equipment in the WDM network generates alarms (for instance, LOS on the input transponder). When the Optical Transport Manager does not diagnose a root-cause in the WDM network, but does diagnose a problem in the SONET/SDH network, it indicates that the WDM alarms are impacts of the SONET/SDH problem.

CHAPTER 9
Notifications and Impacts for Next Generation WDM Networks

This chapter describes problems diagnosed for each element in Next Generation WDM networks. Topics covered in this chapter include:

- Optical Transport Manager analysis for Next Generation WDM networks 90
- Notifications and symptomatic events 90

Optical Transport Manager analysis for Next Generation WDM networks

The Optical Transport Manager calculates which root-cause problems are causing symptomatic events and creates notifications for the problem origin. The Optical Transport Manager uses the relationships in the topology to calculate the impact that a root-cause problem in one element has on the elements and services that are connected to, or depend on it.

Notifications and symptomatic events

Table 14 on page 90 lists the root-cause notifications for optical network elements and connections in networks that support TMF 864. Notifications from the WDM-NG Manager are displayed in the Notification Log in to the SolutionPack for EMC Smarts, available from the EMC M&R user interface.

The *SolutionPack for Optical Wavelength Services Summary Sheet* article explains how to set up the collection of TMF 864-related data. The *SolutionPack for EMC Smarts Summary Sheet* article provide information on viewing notifications and topology from the EMC M&R user interface. The *Service Assurance Suite Documentation Index*, available on the EMC Community Network (ECN), provides links to related documentation.

Table 14 Notifications generated by Optical Transport Manager

Managed Element	Notification	Description
OpticalNetworkElement	CommunicationStateDown	The EMS lost management connection with the Optical Network Element.
	Down	The Optical Network Element is powered off or down.
Shelf	DownEvent	A Shelf is powered off.
	Down	A Shelf is powered off or down.
EMS	AsyncTimedOut	Event processing via the 'async' message queue has timed out for this EMS.
	Disconnectted	Loss of Communication with the EMS.
	EmsAdapterNotRunning	EMS adapter has shut down.
	SyncTimedOut	Event processing via the 'sync' message queue has timed out for this EMS.
Equipment (Card)	DownOrUnavailable	Equipment/Card is either down or removed.
	Down	Equipment/Card is either down or removed.

Table 14 Notifications generated by Optical Transport Manager (continued)

Managed Element	Notification	Description
PTP	LosEvent	Loss of Signal.
	AOPE	Aggregate Output Power Exceeded.
	LOF	Loss of Frame.
	LOFD	Loss of Frame Delineation.
	OPOVLD	Optical Power Overload.
	TIM	Trace identifier Mismatch.
	Vendor/Alarm	Vendor specific alarm.
	Down	Down, due to a service affecting alarm condition.
CTP	LosEvent	Loss of Signal.
	LOF	Loss of Frame.
	LOFD	Loss of Frame Delineation.
	LOM	Loss of Multiframe.
	LOSTC	Loss of Tandem Connection.
	MSIM	Multiplex Structure Identifier Mismatch.
	TIM	Trace identifier Mismatch.
	VendorAlarm	Vendor specific alarm.
	Down	Down, due to a service affecting alarm condition.
TopologicalLink	Down	No traffic is passing through the link in one or both directions and symptoms may indicate fiber failure.
DropsideTopologicalLink	Down	No traffic is passing through the link in one or both directions and symptoms may indicate link failure.
Route	Unavailable	This SubnetworkConnection (SNC) Route is down due to one or more failures in its path.
SubnetworkConnection	ServiceAtRisk	SubnetworkConnection is at Risk due to a loss of redundancy in its Routes
	ServiceUnavailable	The SubnetworkConnection is down.
ClientTrail	Unavailable	This ClientCircuit Trail is down.
ClientCircuit	ServiceAtrisk	The ClientCircuit is at risk due to a loss of redundancy in its Trails.
	ServiceUnavailable	This ClientCircuit is down.

Root cause events for WDM-NG Manager

The WDM-NG domain manager calculates the following root-cause events based on raw EMS alerts collected by the SolutionPack for Optical Wavelength Services from EMS systems in networks that support TMF 864.

OpticalNetworkElement::Down

An OpticalNetworkElement is powered off or down.

Symptoms

- loss-of-communication alarm
- Loss Of Signal on Ports (PTP) on other ONEs that are directly connected to a Card on this ONE.

Impact

- Route::Unavailable
- ClientTrail::Unavailable
- ClientCircuit::ServiceUnavailable or ClientCircuit::AtRisk
- SubnetworkConnection::ServiceUnavailable or SubnetworkConnection::AtRisk
- LosEvent on Ports on other ONEs that are directly connected to a Card on this ONE.

All services (SubnetworkConnections and ClientCircuits) that pass through this ONE are shown as impacted. ONE::Down explains why a service may be unavailable (no working alternate path) or at risk (when there is a working protected path, though a different ONE).

Shelf::Down

A Shelf within an OpticalNetworkElement is powered off or down.

Symptoms

- loss-of-communication alarm on the ONE (if it is a MAIN_SHELF) or a LOSSCOM alarm on the Shelf (if it is a PORT_SHELF)
- Loss Of Signal on Ports (PTP) on other ONEs that are directly connected to a Card on this Shelf.

Impact

- Route::Unavailable
- ClientTrail::Unavailable
- ClientCircuit::ServiceUnavailable or ClientCircuit::AtRisk
- SubnetworkConnection::ServiceUnavailable or SubnetworkConnection::AtRisk
- LosEvent on ports (PTP or CTP) on other ONEs that are directly connected to Card on this Shelf.

Equipment::Down

A Card is removed, or a mismatching Card is placed the the slot.

Symptoms

- EquipmentMismatch or HardwareMismatch or ReplaceableUnitMissing
- Optionally, LosEvents on peer ports (PTP or CTP)

Impact

- Route::Unavailable
- ClientTrail::Unavailable
- ClientCircuit::ServiceUnavailable or ClientCircuit::AtRisk
- SubnetworkConnection::ServiceUnavailable or SubnetworkConnection::AtRisk
- LosEvents on peer ports (PTP or CTP)

Services that are flowing through this Card, a subcard, or related Cards (which form a degree) are shown as impacted.

TopologicalLink::Down

A fiber is cut or unplugged or got damaged. The TopologicalLink is modeled as a bidirectional fiber, but in reality, there are separate fibers for transmit and receive, which can individually go bad or unplugged.

Symptoms

- Loss Of Signal on one or both of the connected Ports (PTP or CTP).

Impact

- Route::Unavailable
- ClientTrail::Unavailable
- ClientCircuit::ServiceUnavailable or ClientCircuit::AtRisk
- SubnetworkConnection::ServiceUnavailable or SubnetworkConnection::AtRisk
- LosEvents on peer ports (PTP or CTP)

PTP::Down

A service affecting alarms is reported on the PTP.

Symptoms

- Any of the service affecting alarms are reported on the PTP.

Impact:

- Route::Unavailable
- ClientTrail::Unavailable
- ClientCircuit::ServiceUnavailable or ClientCircuit::AtRisk
- SubnetworkConnection::ServiceUnavailable or SubnetworkConnection::AtRisk

CTP::Down

A service affecting alarms is reported on the CTP.

Symptoms

- Any of the service affecting alarms are reported on the PTP.

Impact

- Route::Unavailable
- ClientTrail::Unavailable
- ClientCircuit::ServiceUnavailable or ClientCircuit::AtRisk
- SubnetworkConnection::ServiceUnavailable or SubnetworkConnection::AtRisk
- A higher level CTP::DownEvent

CHAPTER 10
Protection Schemes

Optical Transport Manager supports several protection scheme frameworks for the reliable transport of upper layer traffic such as IP, voice, and data.

Topics covered in this chapter include:

- Protection switching support 96
- 1+1 automatic protection switching 97
- 1:N protection 98
- 1+1 protection 100
- 2-fiber BLSR/MS-SPRing protection 101
- 4-fiber BLSR/MS-SPRing protection 103
- UPSR/SNCP protection 105
- 1+1 ClientCircuit/TopologicalLink Protection 106
- SNC (Subnetwork connection) protection: 110
- Y-Cable protection 110

Protection switching support

One of the key features of optical networks is protection switching. EMC Smarts Optical Transport Manager supports Layer 1 network topologies with the following protection schemes for SONET/SDH networks:

- 1+1 Automatic Protection Switching (APS)
- 1:N protection
- 1+1 protection
- 2-fiber Bidirectional Line Switched Ring (BLSR) or 2-fiber Multiplex Section-Shared Protection Ring (MS-SPRing)
- 4-fiber BLSR or 4-fiber MS-SPRing
- UPSR (SNCP)

The following protection scheme is supported for the WDM network:

- 1+1 ClientCircuit/TopologicalLink Protection

The following protection scheme is supported for the WDM NG domain:

- Y-cable protection
- SNC protection

The AtRisk Notification

The AtRisk notification identifies when a HighOrder_Circuit or LowOrder_Circuit has lost its redundancy and therefore its failure protection. The HighOrder_Circuit or LowOrder_Circuit goes into an AtRisk condition when a member of a redundancy group that underlays the HighOrder_Circuit or LowOrder_Circuit has failed.

The redundancy or protection group contains two or more of the same type of network objects, for example TopologicalLinks, that also share the same A-end and Z-end points. The following table shows the various redundancy groups, the type of object each contains, and the protection scheme it implements.

Table 15 Protection objects, elements contained, and protection schemes

Protection group object	Network element contained	Protection scheme
TopologicalLinkGroup	TopologicalLink	1+1 APS
RingProtectionGroup	TopologicalLinkGroup	2F-BLSR/2F-MS-SPRing 4F-BLSR/4F-MS-SPRing
LogicalConnectionTPGroup	TopologicalLink	UPSR/SNCP
CardProtectionGroup	Card/Equipment	1:N Card/Equipment protection 1+1 Card/Equipment protection
LinkGroup	OchLink (WDM) OcnLink (WDM)	1+1 ClientCircuit protection (WDM) 1+1 TopologicalLink protection (SONET/SDH)

The way protection is modeled for the WDM-NG domain differs from other domains. WDM-NG protection is described in"SNC (Subnetwork connection) protection:" on page 110 and "Y-Cable protection" on page 110.

When one of the network elements contained in the protection group fails, the protection group object goes into an AtRisk condition. The AtRisk condition propagates up to the object layered over the protection group, such as:

- HighOrder_Trail
- ClientTrail
- TopologicalLink
- OcnLink

One of these object going into an AtRisk condition propagates up to the object it is layered over, such as:

- HighOrder_Circuit
- LowOrder_Circuit
- ClientCircuit

Details of each protection scheme and the classes and relationships used to model each protection scheme are described in the sections following in this chapter.

1+1 automatic protection switching

1+1 automatic protection switching (APS) is a line protection scheme used in SONET/SDH. In this protection scheme, the optical signal is bridged at the source termination point and traverses two optical lines (working and protection). The destination termination point selects one of the lines based on standard switching criteria. Thus, if a signal on a working path is lost or significantly degraded, the destination switch automatically selects the signal on the protection path. The 1 + 1 APS protection protocol allows both unidirectional and bidirectional protection switching modes.

Figure 40 on page 97 shows the physical configuration of the 1+1 Protection Group, in which traffic is bridged at the source node and selected at the destination node.

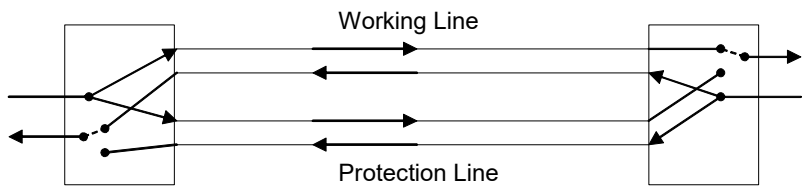

Figure 40 Physical configuration in a protection group

Figure 41 on page 98 shows the classes and relationships used to model 1 + 1 protection. The connection running over the protection group is represented by a TopologicalLinkGroup, which is ComposedOf the two topological link objects that represent the two fiber pairs that make up the protection group.

For 1 + 1 protection TopologicalLinkGroup ComposedOf two object instances, one for Route, one for AlternateRoute.

The Route may be a DropSideTopologicalLink or BBDropSideTopologicalLink with an AlternateRoute of DropSideTopologicalLink or BBDropSideTopologicalLink. Or the Route may be a TopologicalLink or BBTopologicalLink with an AlternateRoute of TopologicalLink or BBTopologicalLink.

The Route and/or AlternateRoute can be black boxes in this protection scheme. For example, a BBTopologicalLink can be an alternate route for a TopologicalLink, or vice versa. And a BBDropSideTopologicalLink can be an alternate route for a DropSideTopologicalLink, or vice versa.

For root-cause analysis, the TopologicalLinkGroup object creates a Route relationship with the working fiber connection, and an AlternateRoute relationship with the protected fiber connection.

For impact analysis, the HighOrder_Circuit or LowOrder_Circuit object creates a LayeredOver/Underlaying relationship with the HighOrder_Trail object. The HighOrder_Trial object creates a LayeredOver/Underlaying relationship with the TopologicalLinkGroup object.

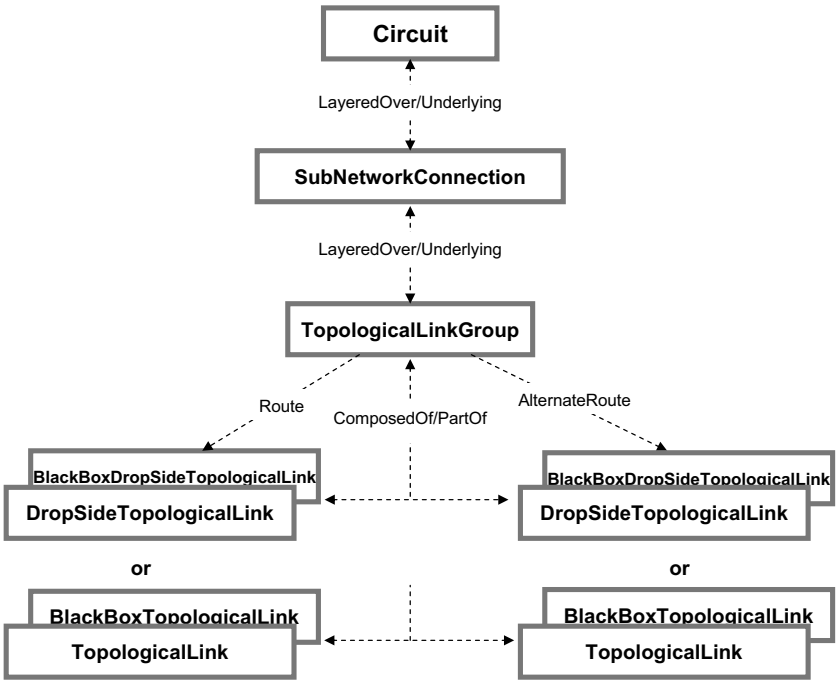

Figure 41 Classes and relationships used in 1+1 protection

1:N protection

In this protection scheme, a single device, Card or Equipment, protects up to 14 others in the same shelf. The type of card or equipment and the number of ports in the card or equipment located in the protection slot must be the same as that of the number of working devices that it protects. When a failure occurs on a working device, the protection

device takes on the role of the working device. All of the facilities connected to the ports on the working device use the ports on the protection device. The 1:N protection scheme is shown in Figure 42 on page 99.

This protection scheme does not deal with the failure of multiple devices; however, a priority scheme would allow protection of the highest priority working device.

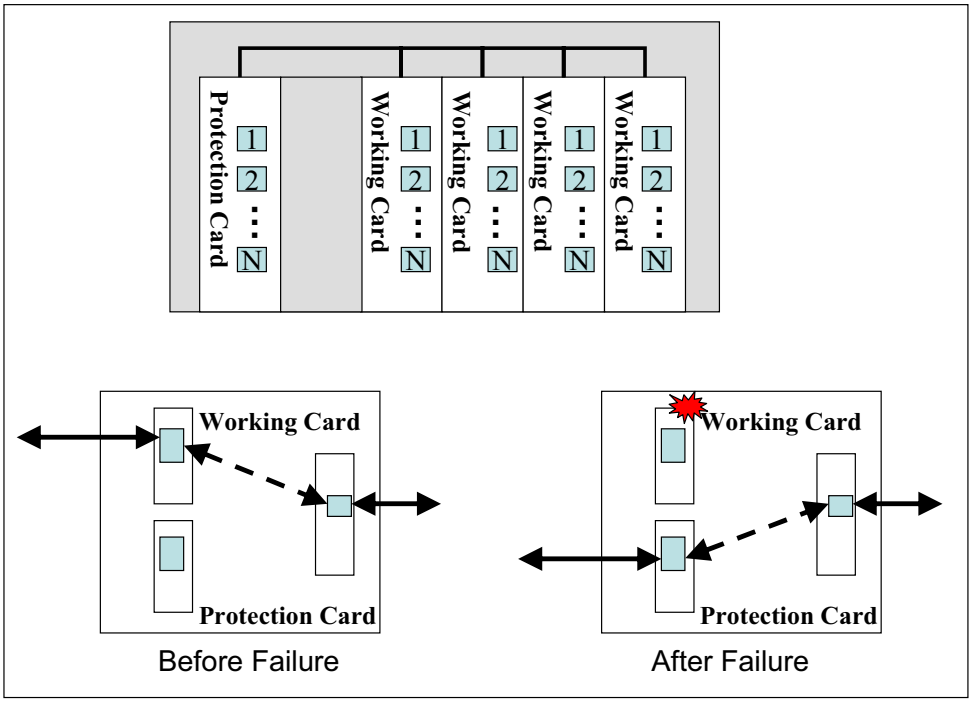

Figure 42 1:N protection scheme

Topology

- No Equipment Protection Group is created for Cards or Equipment participating in 1:N Equipment protection.
- In both the SONET/SDH and Low-order SONET/SDH domains, the TMF 814 Topology Adapter is responsible for discovering and setting up the attributes and relationships in the Card/Equipment objects to indicate their participation in the 1:N Equipment Protection scheme.
- In Low-order SONET/SDH, the Equipment/Cards are imported from the SONET/SDH server for those which have a DSTL or Trail running over them. If there is no Trail, that Card does not participate in 1:N Equipment protection.
- The IsProtected attribute indicates participation of the Card/Equipment in the 1:N Protection scheme.
- The Protects relationship specifies which cards this card is protecting.
- The ProtectedBy relationship specifies which card is protecting this card.

- Services or Circuit are layered over the DSTLs related to the Equipment participating in the 1:N Equipment protection scheme. Both the working and the protecting cards layered over the DSTLs.
- The 1:N Equipment protection scheme applies to Cards, for example, DS1, DS3, E1, etc., which are directly interfacing with Client equipment.
- Services may be protected using the 1:N Equipment protection scheme by having one protected side interfacing with the Client protected, while the other side may or may not be protected.
- A Circuit or Trail related to the 1:N Equipment protection group is not discovered by the TMF814 Topology Adapter. It is created independently, after the topology discovery, using TMF 814 Topology Adapter.

Event

- TMF814 Event Adapter is responsible for marking the Card objects with a Failure event.
- TMF814 Event Adapter is also responsible for indicating if the failure of the Card/Equipment impacts a service. This is indicated by the “IsServiceAffected” attribute of the Card/Equipment.
- The “IsServiceAffected” attribute does not apply to the protecting card.

Root Cause and Impact Analysis

- A ServiceUnavailable/TrailDown notification is generated for the services related to the card for which “IsServiceAffected” is true.
- A ServiceAtRisk/TrailAtRisk notification is generated for the services related in the following cases:
  - Protecting card is down
  - Working card is down and protecting card is not being already used for carrying services of another down working card.

1+1 protection

In this protection scheme, a protection device, Card or Equipment, is paired with a working Card or Equipment in the same shelf. The type of card or equipment and the number of ports in the protection device must be the same as that of the working device that it protects. The ports on the protection device must match the ports on the working device. For example, port 2 on an OC-12/STM-4 working card is protected by port 2 on the OC-12/STM-4 protection card. In this scheme, any of the ports on the protection card or equipment can be assigned to protect the ports on the working device, while other ports on the working card or equipment can remain unprotected.

Figure 43 on page 101 shows 1+1 protection.

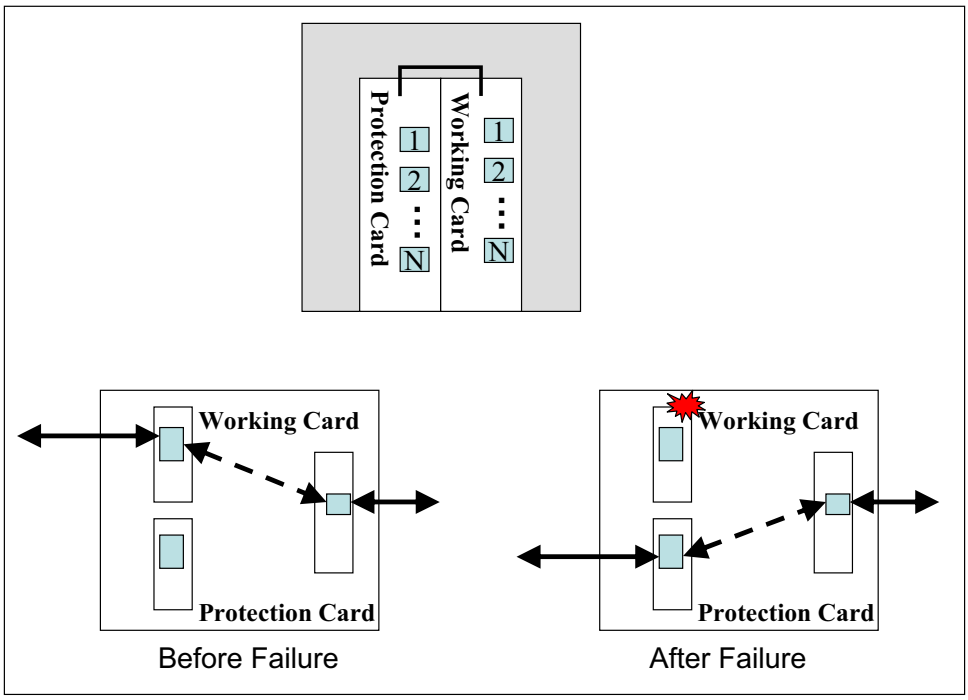

Figure 43 1+1 protection

1+1 protection is implemented using the CardProtectionGroup object which have a ComposedOf/PartOfEquipmentProtectionGroup relationship to Card or Equipment objects.

2-fiber BLSR/MS-SPRing protection

2-fiber Bidirectional Line Switched Ring (BLSR) or Multiplexed Section-Shared Protection Ring (MS-SPRing) protection is a line protection scheme used in SONET/SDH rings. In this scheme, half of the bandwidth of the fiber is used to carry traffic. The other half is used for protection. For example, if the ring is an OC-48/STM-16 ring, tributaries 1-24/1-8 are used for working; while 25-48/9-16 are used for protection. The scheme activates ring switching when there is a line-level failure away from the failure.

Nodes are connected via bidirectional lines to form a ring. Up to 16 Network elements can be connected in a 2F-BLSR/2F-MS-SPRing ring. When a line failure occurs, the nodes that terminate the failed line switch the traffic from the working path to the protection path. The protection path traverses around the ring opposite to the failure.

Figure 44 on page 102 shows the physical configuration of the 2F-BLSR/2F-MS-SPRing Protection Group.

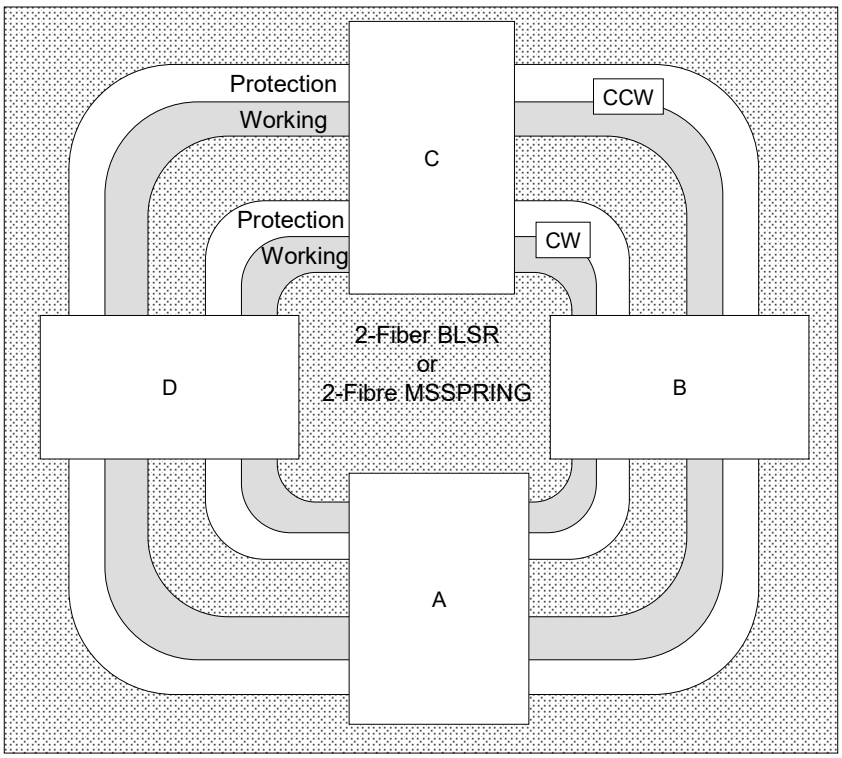

Figure 44 Physical configuration of the 2F-BLSR/2F-MS-SPRing protection group

Figure 45 on page 103 shows the classes and relationships used to model 2F-BLSR/2F-MS-SPRing protection. Each HighOrder_Trail across a 2F-BLSR/2F-MS-SPRing ring has a LayeredOver relationship with the protection group, TopologicalLinkGroup.

The TopologicalLinkGroup object has Route and AlternateRoute relationships that each point to a set of TopologicalLink objects, which are used in the working route and alternate route, respectively.

In Figure 45 on page 103, the ring has two legs; one is used for the working route, while the other is used for the alternate route. The HighOrder_Circuit or LowOrder_Circuit object and HighOrder_Trail object each have a LayeredOver relationship with the TopologicalLinkGroup object. These relationships are used to assess the impact of network failures on the HighOrder_Circuit or LowOrder_Circuit object and HighOrder_Trail objects that use the ring.

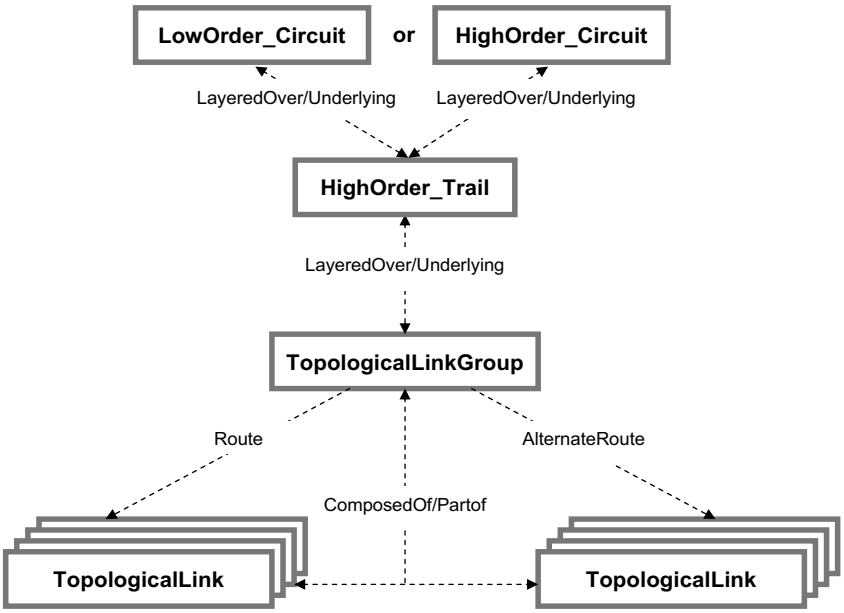

Figure 45 Classes and relationships used in 2F-BLSR/2F-MS-SPRing protection

4-fiber BLSR/MS-SPRing protection

4-Fiber Bidirectional Line Switched Ring (BLSR) or Multiplexed Section-Shared Protection Ring (MS-SPRing) protection is a line protection scheme used in SONET/SDH rings. In this scheme a bidirectional line is used to carry the traffic; another bidirectional line is reserved for protection. When failure occurs, the traffic is switched from the working lines onto the protection lines. This scheme first activates span switching when there is a line level failure. If span switching is not enabled or not possible, the scheme activates ring switching away from the failure.

Nodes are connected via a pair of bidirectional lines (working and protection lines) to form a ring. Up to 16 Network elements can be connected in a 4F-BLSR/4F-MS-SPRing ring. When a line failure occurs, the nodes that bookend the failed line switch the traffic from the working path to one of the two protection paths. The first protection path uses the protection span (similar to 1+1 APS) while the second protection path traverses around the ring opposite to the failure.

Figure 46 on page 104 shows the physical configuration of the 4F-BLSR/4F-MS-SPRing Protection Group.

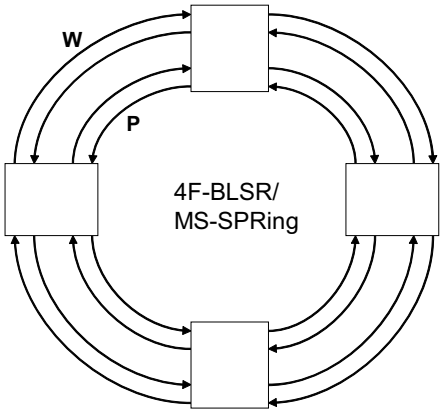

Figure 46 Physical configuration of the 4F-BLSR/4F-MS-SPRing protection group

Figure 47 on page 104 shows the classes and relationships used to model 4F-BLSR/4F-MS-SPRing protection. Each HighOrder_Circuit or LowOrder_Circuit across a 4F-BLSR/4F-MS-SPRing ring is LayerOver a HighOrder_Trail. The HighOrder_Trail is LayeredOver a RingProtectionGroup object. Each RingProtectionGroup object has a ComposedOfRPG relationship with TopologicalLinkGroup objects. Each TopologicalLinkGroup object has a Route relationship for the working route and an AlternateRoute for the alternate route, which is similar to the 1 + 1 protection group for a link between two network elements. Each RingProtectionGroup also has a RouteProtectedBy relationship with TopologicalLink objects, which participate in ring switching.

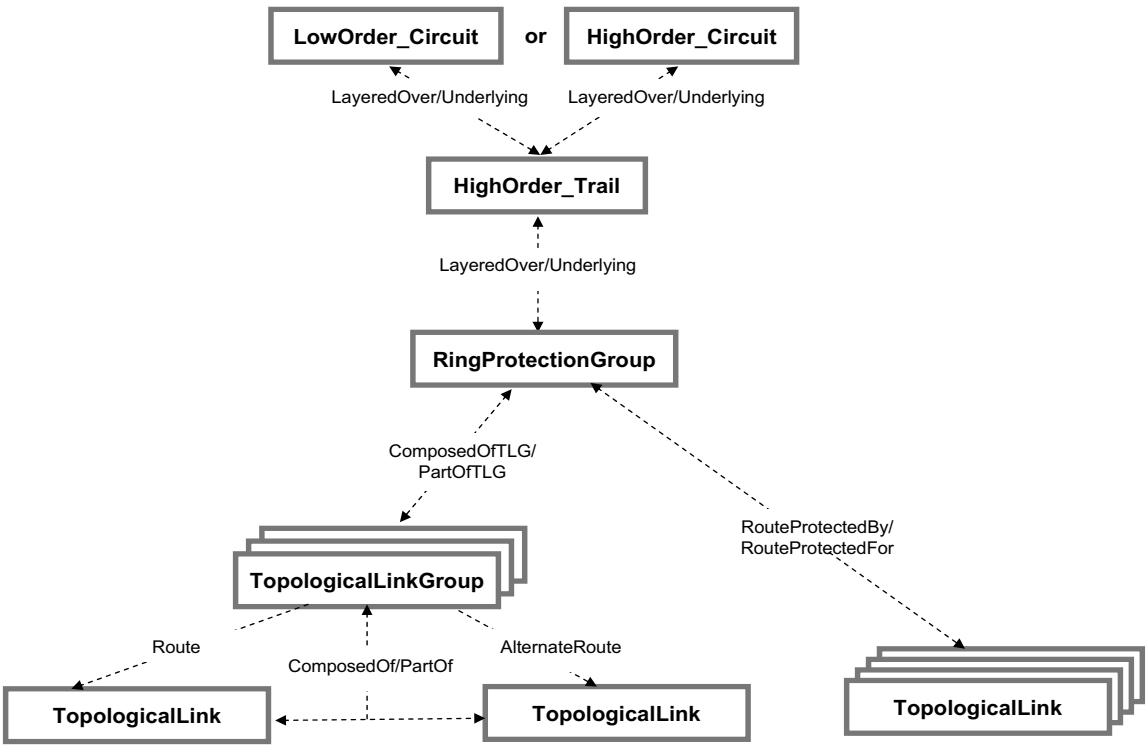

Figure 47 Classes and relationships used in 4F-BLSR/4F-MS-SPRing protection

UPSR/SNCP protection

Unidirectional Path Switch Ring (UPSR) or Subnetwork Connection Protection (SNCP) is a path protection scheme used in SONET/SDH rings. Nodes are connected via bidirectional lines to form a ring.

This protection scheme offers 1+1 protection for each logical connection configured across the ring. Thus SONET path traffic (STSn) or SDH path traffic (VC3,VC4, VC4-nC) is bridged at the source logical termination point and traverses the ring in both directions towards its destination node. At the destination node, one of the paths is selected based on standard switching criteria. Thus, if a signal on one path is lost or significantly degraded, the destination switch automatically selects the signal on the alternate path.

Figure 48 on page 105 shows the physical configuration of the USPR/SNCP Protection Group, in which traffic is bridged at the source node. This traffic takes alternate paths around the ring and is finally selected at the destination node. The protection occurs at the destination, where the path overheads of the alternate paths are monitored for the purpose of switching to the path with better quality.

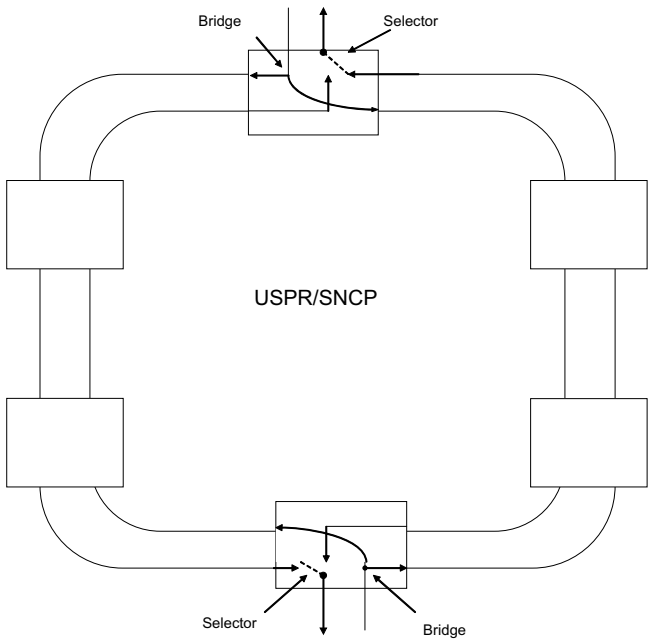

Figure 48 Physical configuration of the UPSR/SNCP group

Figure 49 on page 106 shows the classes and relationships used to model UPSR/SNCP protection.

The HighOrder_Circuit or LowOrder_Circuit that travels across a ring that implements UPSR/SNCP is LayeredOver a HighOrder_Trail. The HighOrder_Trail is LayeredOver a TopologicalLinkGroup or a LogicalConnectionTPGroup object. Either has a Route and AlternateRoute relationship with a set of CTP objects, which are part of the working route the protection route, respectively.

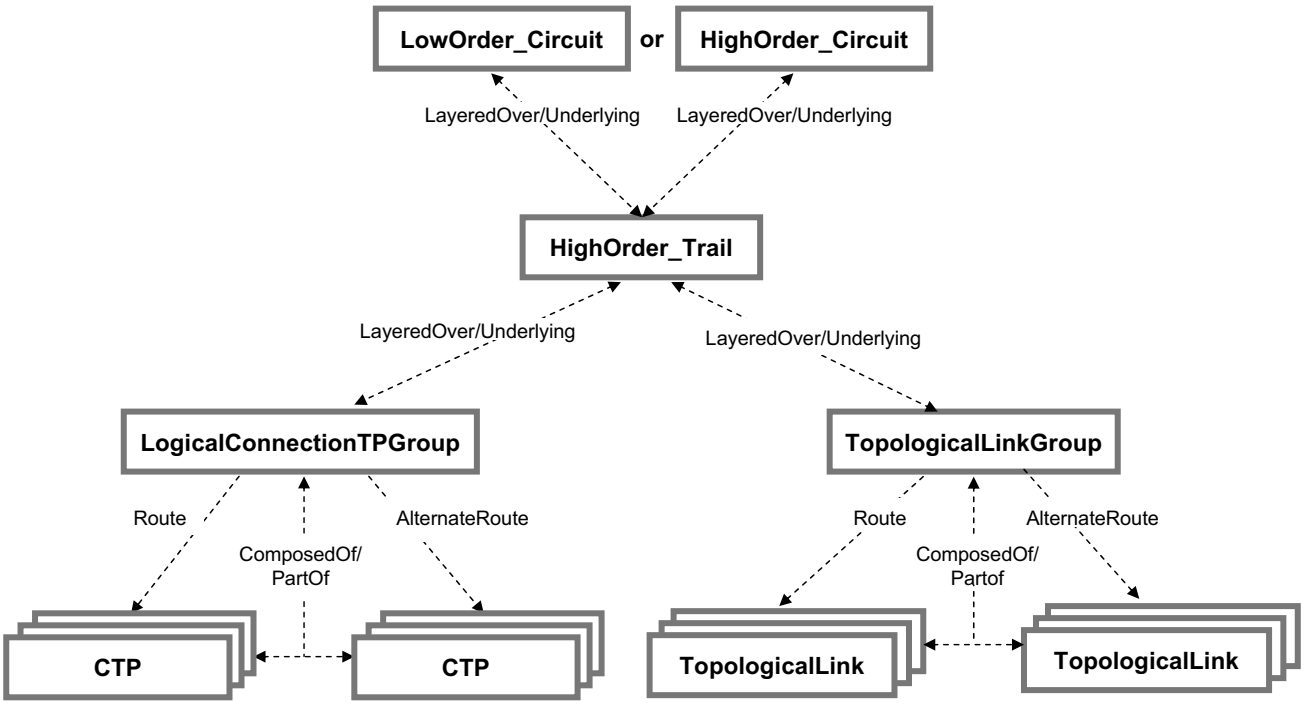

Figure 49 Classes and relationships used in UPSR/SNCP protection

1+1 ClientCircuit/TopologicalLink Protection

1+1 ClientCircuit/TopologicalLink Protection protects WDM wavelength service and SONET/SDH traffic over WDM networks. Wavelength service is carried via the ClientCircuit entity and SONET/SDH traffic is carried via the TopologicalLink entity.

A ClientCircuit or TopologicalLink may ride over several logical and physical entities. When some of those entities duplicate the same segment of the route between OcnLinks or OchLinks, the discovery adapter puts them in a protection group which is modeled as a LinkGroup entity. This allows for redundancy in the service underlaying the ClientCircuit or TopologicalLink.

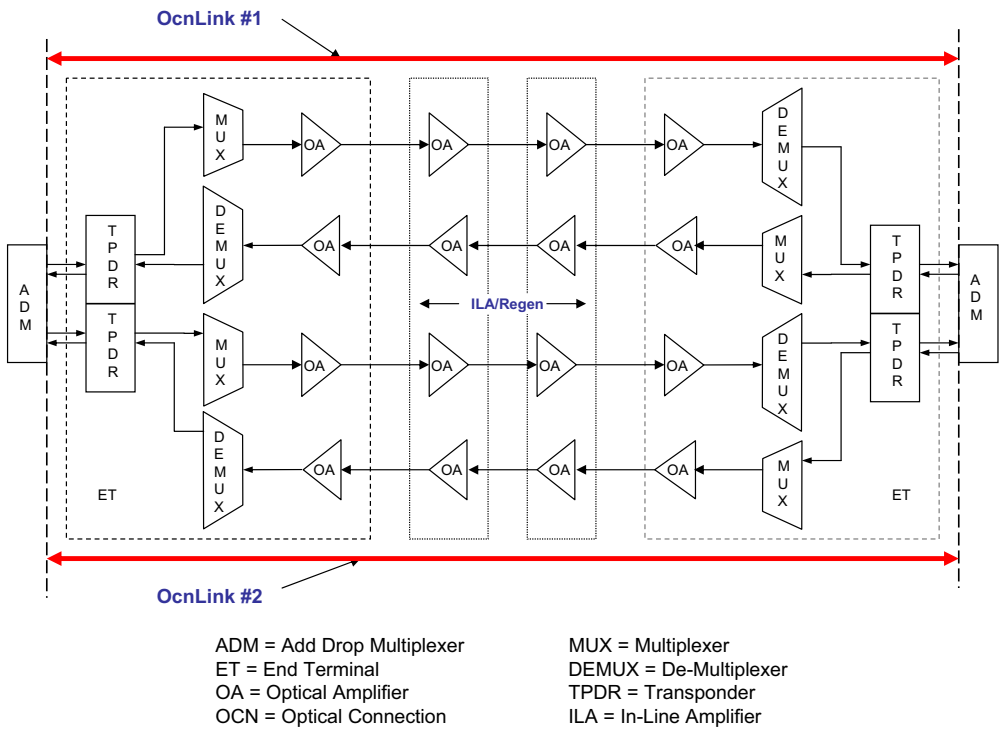

Figure 50 WDM protection with duplicate OcnLinks

Figure 50 on page 107 shows two OcnLinks both spanning the route from the input of one transponder (TransponderInOcnPort) to the output of another transponder (TransponderOutOcnPort). The discovery adapter insures that none of the equipment in the working route is shared with the protection route.

In the OcnLink protection scheme, the LinkGroup is composed of OcnLinks. The ClientTrail or TopologicalLink is layered over the LinkGroup. The OcnLinks are layered over one or more OchLinks which is a logical connection between multiplexers/demultiplexers. See Figure 52 on page 109.

In the OchLink protection scheme, the LinkGroup is composed of OchLinks. An OcnLink is layered over the LinkGroup. Underlaying the OchLinks are one or more FiberLink objects, the lowest level in the architecture. The connections between the add-drop multiplexer (ADM) and the transponders (TPDR) are FiberLinks underlaying the OcnLink.

Figure 51 on page 108 shows two OchLinks spanning the same route from the input of one multiplexer (TransponderInOchPort) to the output of a demultiplexer (TransponderOutOchPort). Like OcnLinks, the OchLinks must have unique routes with no shared equipment.

The FiberLinks connecting the transponders to the mux/demuxers is part of OchLink and underlays the OchLink.

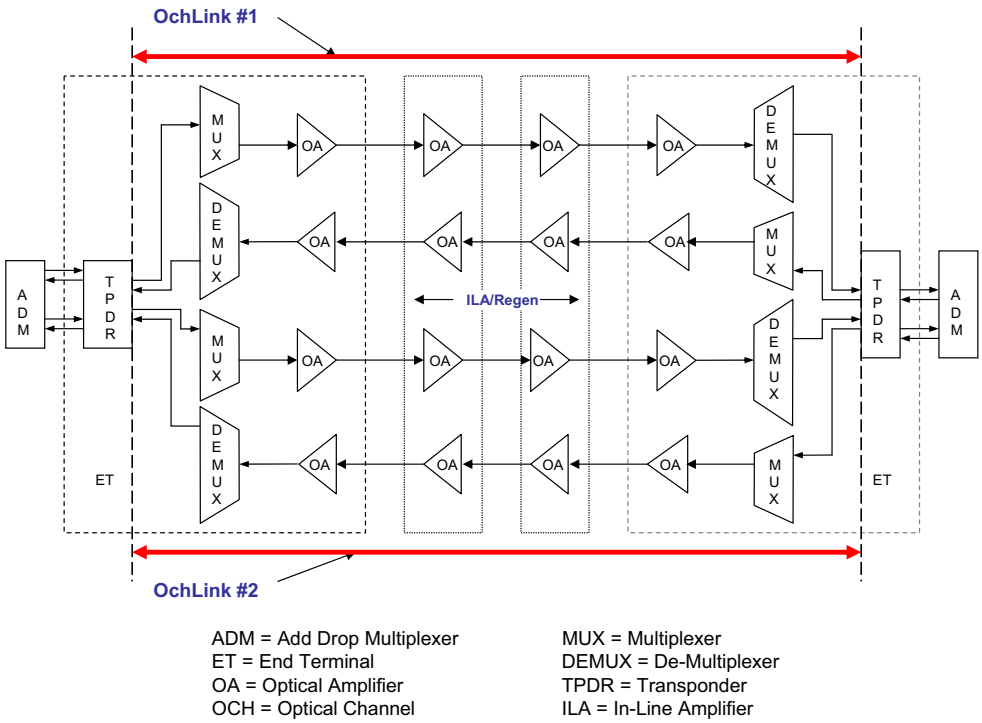

Figure 51 WDM protection with duplicate OchLinks

In the 1+1 ClientCircuit/TopologicalLink protection scheme, switching is handled by negotiation between the transponders.

When a failure or fault occurs on a logical or physical entity that underlays the ClientCircuit or TopologicalLink, if it is part of a LinkGroup, the services layered over the entity receive an “AtRisk” notification, as does the LinkGroup. The “AtRisk” event is propagated to all layers from the LinkGroup to the wavelength service or TopologicalLink.

Only in the event of a failure of all entities in a protection group, will the event notification be “Down” for the TopologicalLink or “ServiceUnavailable” for the ClientCircuit. This notification will also be propagated to all entities layered over the entities in the LinkGroup.

Figure 52 on page 109 shows the classes and relationships used to model the 1+1 ClientCircuit/ TopologicalLink protection scheme with redundant OcnLinks. The LinkGroup underlays a ClientTrail for wavelength service or a TopologicalLink for SONET/SDH traffic. The LinkGroup is composed of a route and alternate route each of which are layered over OchLinks.

Figure 53 on page 109 shows the classes and relationships used to model the 1+1 ClientCircuit/ TopologicalLink protection scheme with redundant OchLinks. The LinkGroup underlays a OcnLink. The LinkGroup is composed of a route and alternate route each of which are layered over FiberLinks.

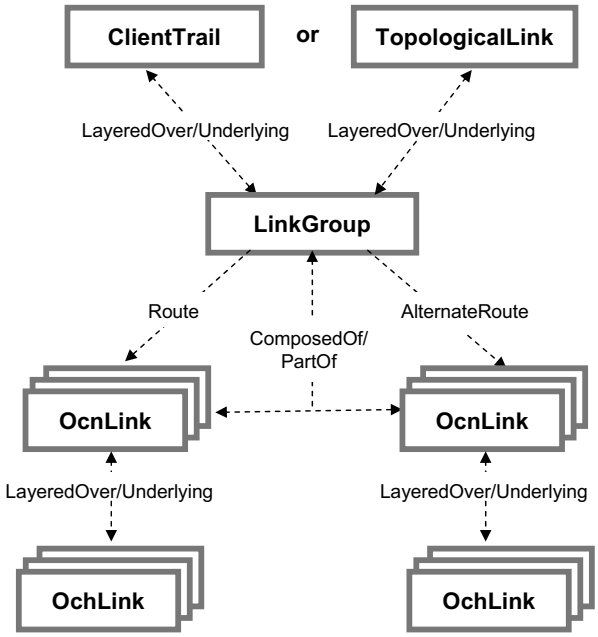

Figure 52 Classes and relationships used in 1+1 ClientCircuit/TopologicalLink OcnLink protection

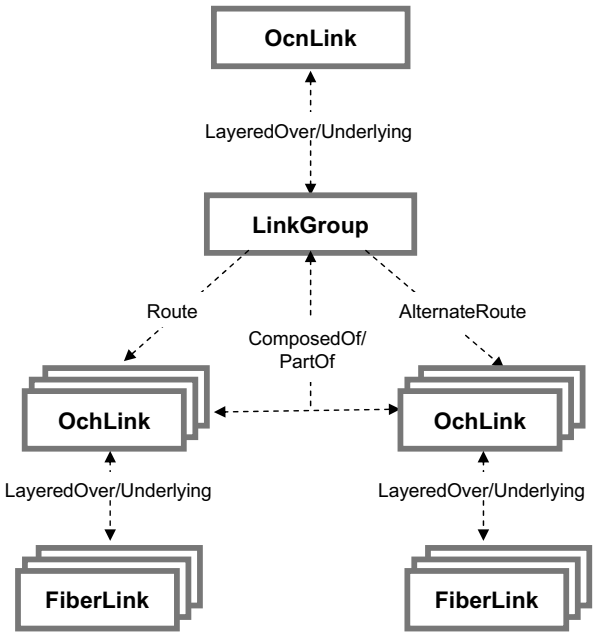

Figure 53 Classes and relationships used in 1+1 ClientCircuit/TopologicalLink OchLink protection

SNC (Subnetwork connection) protection:

SNC protection is a path protection scheme that offers 1+1 protection for a given Subnetwork connection. There are two different protection types associated with the SNC:

- Fully protected: In this case the working and protected paths, referred to as Route, cover the complete SNC.
- Partial protection: Only a section of the SNC will have the protection. WDM-NG domain does not support this protection scheme.

Root Cause and Impact

- When one of the Routes goes down due to any underlying (Topological Link, Equipment, Port) fault, an AtRisk notification is generated for the SubnetworkConnection.
- When all the Routes are down, then ServiceUnavailable event is generated for the SNC.

Y-Cable protection

Y-cable protection is a path protection scheme that offers 1+1 protection. Differences between Y-Cable and SNC protection:

- Y-Cable protection starts from the transponder. When a Y-cable connects two different transponders, the SNCs configured on each transponder act as the working and protected SNC.
- Y-Cable protects the full Wavelength service represented by the ClientCircuit instance in the topology. The scope of SNC protection is limited to EMS. A logical entity, called ClientTrail, is created to represent the Working and protected paths.

Root cause and impact

- When one of the clientTrails goes down then AtRisk notification is generated on the ClientCircuit.
- If all the clientTrails are down then ServiceUnavailable event is generated for the ClientCircuit.

APPENDIX A
Abbreviations and Acronyms

Table 16 on page 111 lists common abbreviations and acronyms that are used in this document.

Table 16 Abbreviations and acronyms for EMC Smarts Optical Transport Manager

Term	Description
AIS-L	Alarm Indication Signal-Line Level
AIS-P	Alarm Indication Signal-Path Level
API	Application Program Interface
APR	Automatic Power Reduction
BDI	Backward Defect Indication
BER	Bit Error Rate
BLSR	Bidirectional Line Switched Ring
CCT	Codebook Correlation Technology
CORBA	Common Object Request Broker Architecture
CTP	Connection Termination Point
DCF	Dispersion Compensation Fiber
EMS	Element Management System
FEC	Forward Error Correction
LOF	Loss of Frame
LOP	Loss of Pointer
LOS	Loss of Signal
MS-SPRing	Multiplexed Switched Protection Ring
OCH	Optical Channel
OCN	Optical Carrier Network
OCS	Optical Supervisory Channel
OMS	Optical Multiplex Section
OSS	Operations Support System
OTM	Optical Transport Manager
OTS	Optical Transport Section
PDH	Pliesosynchronous Digital Hierarchy
PDI	Payload Defect Indication
PLM	Payload Label Mismatch

Table 16 Abbreviations and acronyms for EMC Smarts Optical Transport Manager (continued)

Term	Description
PTP	Physical Termination Point
RDI	Remote Defect Indication
RFI	Remote Failure Indication
SD	Signal Degrade
SDH	Synchronous Digital Hierarchy
SF	Signal Failure
SNCPP	Subnetwork Connection protection
SONET/SDH	Synchronous Optical NETwork
TIM	Trace Identifier Mismatch
TMF 814	TeleManagement Forum 814 Specification
UNEQ	Unequipped
UPSR	Unidirectional path switched ring
WDM	Wavelength Division Multiplexing

APPENDIX B
User-Defined Attributes in Notifications

There are ten user-definable notification attribute fields in an Optical Transport Manager event notification. Some of these are needed by Optical Transport Manager for certain notifications. This appendix provides attribute for the user-defined attributes used by Optical Transport Manager notifications.

- User-defined attributes for SONET/SDH Circuits and Trails 114
- User-defined attributes for Low Order SONET/SDH Circuits and Trails..... 114
- User-defined fields for OpticalNetworkElement 115

User-defined attributes for SONET/SDH Circuits and Trails

Table 17 on page 114 lists the values that OTM populates into the first three user-defined attribute fields. These are populated only in HighOrder_Circuit and HighOrder_Trail notifications in the SONET/SDH domain.

Note: CTP failures will populate UserDefined1 and UserDefined2 fields of HighOrder_Circuit notification.

Table 17 User-defined attributes for Circuit and Trail notifications in SONET/SDH

Notification Attribute	Description
UserDefined1	One of the following: • Service Provider Network – Internal Failure • a-End Customer Network – External Failure • z-End Customer Network – External Failure **Note:** Not used for HighOrder_Trails.
UserDefined2	Elements of the CTP alarm vector separated by a semicolon, each element consists of: CTP Name | CTP Type | Notify Timestamp | Clear Timestamp | Notify/Clear |Alarm; Example: CTP-IOS_1/1-3-1-1/1/8|TP_INROUTE| 22-May-2007 12:00:00EDT |22-May-2007 13:00:00 EDT| Clear | RDI_P;

User-defined attributes for Low Order SONET/SDH Circuits and Trails

Table 18 on page 115 lists the values that OTM populates into the first four user-defined attribute fields. These are populated only in LowOrder_Circuit and HighOrder_Trail notifications in the Low Order SONET/SDH (PDH) domain

Note: CTP failures will populate UserDefined1 and UserDefined2 fields of LowOrder_Circuit notification.

Table 18 User-defined attributes for Circuit and Trail notifications in Low Order SONET/SDH

Notification Attribute	Description
UserDefined1	One of the following: • Service Provider Network – Internal Failure • aEnd Customer Network – External Failure • zEnd Customer Network – External Failure • Customer Network – External Failure **Note:** Not used for HighOrder_Trails.
UserDefined2	Elements of the CTP alarm vector separated by a semicolon, each element consists of: CTP Name | CTP Type | Notify Timestamp | Clear Timestamp | Notify/Clear |Alarm; Example: CTP-IOS_1/1-3-1-1/1/8|TP_INROUTE| 22-May-2007 12:00:00EDT |22-May-2007 13:00:00 EDT| Clear | RDI_P; **Note:** Does not show CTP alarms for underlying HighOrder_Trails.

User-defined fields for OpticalNetworkElement

Table 19 on page 115 lists the values that OTM populates into the second user-defined attribute field only for OpticalNetworkElement notifications in the WDM domain.

Table 19 User-Defined Attributes for ONE Notifications in WDM

Notification Attribute	Description
UserDefined2	Populated with fan and power supply alarm information, alarm entities are separated by a semicolon, each element consists of: ‹FAN or POWER_SUPPLY› | ‹Component Id› | ‹Alarm› | ‹NOTIFY or CLEAR› Example: FAN|1-3-6|FAN_LOW_RPM|NOTIFY;POWER_SUPPLY|PS1|DOWN|NOTIFY

APPENDIX C
Naming Conventions for Object Classes

This section describes the naming conventions used by the Optical Transport Manager to name object classes. Topics include:

- Generic naming convention..... 118

Generic naming convention

The following is the generic naming convention that the Optical Transport Manager uses for object classes:

```
<PREFIX>-<TID>/<bay>-<shelf>-<slot>[-sub-slot]/[port num/]
   <Port Type>-<Port Direction>[-<channel>][-BandName][-AD|-PT]
```

Table 20 on page 118 lists the parts of the naming convention and what they identify.

Table 20 Object class naming convention parts

Name part	Description
PREFIX	Internal code for the class. Table 21 on page 119 and Table 22 on page 119 provide more information.
TID	Terminal identifier
Bay	Bay location of Optical NetworkElement
Shelf	Shelf number
Slot	Slot number used for Card.
Sub-slot	Sub-slot number for sub-card. This is optional.
Port Num	Port Number on a given card. This is optional.
Port Type	Type of port; for example, OMS/OCH/OCN. Table 22 on page 119 provides more information.
Port Direction	“In” or “Out”. Table 22 on page 119 provides more information.
Channel	Channel number. This is optional. Table 22 on page 119 provides more information.
Band Name	Band name if exists. This is optional.
AD	Add Drop. This is optional.
PT	Pass Through. This is optional.

Some fields, even those not indicated as optional, may not be valid for every object type. For example,

- An OpticalNetworkElement object has only a TID field.
- A Card object has the following fields:

  ```
  <PREFIX>-TID/<bay>-<shelf>-<slot>
  ```

  The remaining fields are invalid for Card objects.

The following object classes use specialized naming conventions:

- Facility:

  ```
  <PREFIX>-<VendorSpecificString>
  ```

- FiberLink, BBFiberLink, OchLink, OcnLink, and OmsLink:

  ```
  <PREFIX>-<A-End Link>--><Z-End Link>
  ```

- PTP:

```
<PREFIX>-<TID>/<rack>-shelf>-<slot>-<sub slot>/<port num>
```

Examples of these exceptions are found in Table 21 on page 119 and Table 22 on page 119.

Optical Transport Manager for SONET/SDH class names

Table 21 on page 119 lists the Optical Transport Manager SONET/SDH classes, the naming prefix used for each class, and an example name for an object in each class.

Table 21 Optical Transport Manager SONET/SDH class names

Class Name	Prefix Naming Convention	Object Name Example
BBDropSideTopologicalLink	Prefix=BBDSTL	BBDSTL-Node1/1-3-16-1/1
BBTopologicalLink	Prefix=BBTL	BBTL-Node1/1-2-3-4/5-Node2/5-4-2-3/1
Card	Prefix = CARD	CARD-Node1/1-1-10
Equipment	Prefix = EQPT	EQPT-Node1/1-1-10
CTP	Prefix = CTP	CTP-Node11/1-3-1/1/1
DropSideTopologicalLink	Prefix = DSTL	DSTL-Node1/1-1-7/1
OpticalNetworkElement	No Prefix, TID only	Node1
PTP	Prefix = PTP	PTP-Node1/1-1-3/1
TopologicalLink	Prefix = TL	TL-Node1-Node2-p
TopologicalLinkGroup	Prefix = TLG	TLG-Node1/1-1-8/1/Node1/1-1-9/1

Optical Transport Manager for WDM class names

Table 22 on page 119 lists the Optical Transport Manager WDM classes, the naming Prefix and other name parts used for each class, and an example name for an object in each class.

Table 22 Optical Transport Manager for WDM class names

Class Name	Name Part Convention	Object Name Example
AmpInOmsPort	Prefix = PORT Port Type = OMS Port Direction = In	PORT-Node1/1-1-7/OMS-In
AmpInOscPort	Prefix = PORT Port Type = OSC Port Direction = In	PORT-Node1/1-1-7/OSC-In
AmpInOtsPort	Prefix = PORT Port Type = OTS Port Direction = In	PORT-Node1/1-1-8/OTS-In
Amplifier	Prefix = CARD	CARD-Node1/1-1-7
AmpOutOmsPort	Prefix = PORT Port Type = OMS Port Direction = Out	PORT-Node1/1-1-8/OMS-Out

Table 22 Optical Transport Manager for WDM class names (continued)

Class Name	Name Part Convention	Object Name Example
AmpOutOscPort	Prefix = PORT Port Type = OSC Port Direction = Out	PORT-Node1/1-1-8/OSC-Out
AmpOutOtsPort	Prefix = PORT Port Type = OTS Port Direction = Out	PORT-Node1/1-1-7/OTS-Out
BBFiberLink	Prefix = BBFL	BBFL-Node1/1-1-11/1/OMS-Out-->Node1/1-1-8/OMS-In
Card	Prefix = CARD	CARD-Node1/1-1-1
ClientInOcnPort	Prefix = PORT Port Type = OCN Port Direction = In	PORT-Node6/2-2-8/OCN-In-1
ClientOutOcnPort	Prefix = PORT Port Type = OCN Port Direction = Out	PORT-Node6/2-2-7/OCN-Out-1
DemuxInOmsPort	Prefix = PORT Port Type = OMS Port Direction = In	PORT-Node1/1-1-1/OMS-In
DemuxOutOchPort	Prefix = PORT Port Type = OCH Port Direction = Out Channel = 48	PORT-Node1/1-2-1/OCH-Out-48
DemuxOutOmsPort	Prefix = PORT Port Type = OMS Port Direction = Out Channel = 2	PORT-Node1/1-3-1/OMS-Out-2
Facility	Prefix = FACIL VendorSpecificString = Facility type and links	FACIL-Adapter-3011 DWDM Node1 Node2
FiberLink	Prefix = FL	FL-Node1/1-1-11/1/OMS-Out-->Node1/1-1-8/OMS-In
MuxInOchPort	Prefix = PORT Port Type = OCH Port Direction = In Channel = 79	PORT-Node1/1-3-11/OCH-In-79
MuxInOmsPort	Prefix = PORT Port Type = OMS Port Direction = In	PORT-Node1/1-1-11/OMS-In
MuxOutOmsPort	Prefix = PORT Port Type = OMS Port Direction = Out	PORT-Node1/1-1-11/OMS-Out
OchLink	Prefix = LL	LL-Node1/1-3-11/OCH-In-79-->Node5/1-2-1/OCH-Out-79
OcnLink	Prefix = LL	LL-Node1/2-2-8/OCN-In-1-->Node5/2-2-7/OCN-Out-1

Table 22 Optical Transport Manager for WDM class names (continued)

Class Name	Name Part Convention	Object Name Example
OmsLink	Prefix = LL	LL-Node1/6-2-7/OMS-In-->Node6/6-2-8/OMS-Out
OpticalNetworkElement	No Prefix, TID only	Node1
Transponder	Prefix = CARD	CARD-Node1/2-2-7
TransponderInOchPort	Prefix = PORT Port Type = OCH Port Direction = In Channel = 79	PORT-Node1/2-2-7/OCH-In-79
TransponderInOcnPort	Prefix = PORT Port Type = OCN Port Direction = In Channel = 1	PORT-Node1/2-2-8/OCN-In-1
TransponderOutOchPort	Prefix = PORT Port Type = OCH Port Direction = Out Channel = 79	PORT-Node1/2-2-8/OCH-Out-79
TransponderOutOcnPort	Prefix = PORT Port Type = OCN Port Direction = In Channel = 1	PORT-Node1/2-2-7/OCN-Out-1

INDEX

Numerics

1:N card protection 98
1+1 automatic protection switching 97
1+1 card protection 100
2-Fiber BLSR/MS-SPRing protection 101
4-Fiber BLSR/MS-SPRing protection 103

A

Adapter
    Device adapter 11
Adapters 11, 17
    Event adapter 11, 17
    Inventory 17
    Inventory adapter 11
Administrative console 19
A-end 35, 114, 118
Alarms 16
AmpInOmsPort 49
AmpInOscPort 50
AmpInOtsPort 50
Amplifier 49, 53, 57
    In-line 54
    Notifications generated 84
    Receive 53
    Reverse 54
    Transmit 53
AmpOutOmsPort 49
    Notifications generated 84
AmpOutOscPort 50
AmpOutOts
    Notifications generated 84
AmpOutOtsPort 50
Analysis
    Impact 74, 81
    Root-cause 16
APIs 17, 111
Architecture 8

B

Band-Multiplexer 47, 59
BBFiberLink 50
    Notifications generated 85
BBTopologicalLink
    Down 73
    SignalDegrade 73

C

Card 29, 38, 49, 50, 51
    Down 71, 79
    Notifications generated 70, 78, 84
CardProtectionGroup 30
Circuit 33, 35
Class
    AmpInOmsPort 49
    AmpInOscPort 50
    AmpInOtsPort 50
    Amplifier 49, 53, 57
    AmpOutOmsPort 49
    AmpOutOscPort 50
    AmpOutOtsPort 50
    BBFiberLink 50
    Card 29, 38, 49, 50, 51
    CardProtectionGroup 30
    Circuit 33, 35
    ClientCircuit 61
    ClientTrail 61
    Conduit 29
    ConnectionProtectionGroup 30
    CTP 29, 33, 39
    DemuxInOmsPort 49
    DemuxOutOchPort 49
    DemuxOutOmsPort 49
    DropSideTopologicalLink 29, 31, 38, 39, 40
    Facility 48, 50, 51
    FiberLink 50, 58
    HighOrder_Circuit 29, 33, 41
    HighOrder_Trail 29, 33, 35, 39, 41, 42
    InputPort 50
    LogicalConnection 29, 33, 34, 36, 42
    LogicalConnectionProtectionTPGroup 36
    LogicalConnectionTPGroup 30
    LogicalLink 50
    LowOrder_Circuit 39, 41, 43
    MeshSubnetworkConnection 29, 33, 34
    MuxInOchPort 49
    MuxInOmsPort 49, 52
    MuxOutOmsPort 49, 52
    OchLink 50, 58, 59
    OcnLink 50, 58, 59
    OpticalNetworkElement 29, 38, 39, 48, 50, 51
    OutputPort 50
    Port 57
    PTP 29, 38, 43, 50, 60
    RingProtectionGroup 30
    SubNetworkConnection 29
    SubnetworkConnection 33, 34
    TopologicalLink 29, 30, 31, 32, 40, 50, 58, 60
    TopologicalLinkGroup 30, 32, 36, 40, 43
    Transponder 49, 55
    TransponderInFecPort 49
    TransponderInOchPort 49
    TransponderInOcnPort 49
    TransponderOutOchPort 49
    TransponderOutOcnPort 49
    WDM object 48
ClientCircuit 61
ClientTrail 61
Conduit 29

Notifications generated 70
Connection classes 58
Connection object model 35, 42
ConnectionProtectionGroup 30
Connectivity resilience 23
Cross-domain correlation 13, 22, 88
CTP 29, 33, 39

D

Data flows 11, 12, 13
Data model 15
Demultiplex 52
Demultiplexer 52, 57
DemuxInOmsPort 49
DemuxOutOchPort 49
DemuxOutOmsPort 49
Discovery 15
Domain Manager 11
DropSideTopologicalLink 29, 31, 38, 39, 40
Failure Impact 75
Notifications generated 70, 75, 78

E

EMS
Notifications generated 71
End-to-end client service 36, 43
Equipment 78
Events 70, 78, 84

F

Facility 48, 50, 51
Failures
Between components 23
Diagnosed
PDH network elements 79
SONET/SDH network elements 71
WDM network elements 84
EMS to managed device 24
External 73, 80
Network connections 72, 80
Northbound alarms 23
Optical network equipment 71, 79
Southbound EMS connectivity 23
Southbound events 23
FiberLink 50, 58
OCH
Notifications generated 85, 91
OCN
Notifications generated 84
OMS
Notifications generated 85
OTS
Notifications generated 85

G

Global Console 11, 14, 18, 19, 24
Global Manager 11, 14

H

High-order and low-order domain separation 38
HighOrder_Circuit 29, 33, 41
Notifications generated 71
HighOrder_Trail 29, 33, 35, 39, 41, 42
Notifications generated 71, 78

I

ICIM Common Informartion Model 15
Impact analysis 16
PDH 81
SONET 74
WDM 85
Impact correlation 16
SONET/SDH 20
WDM 22
Impact notification
SONET/SDH 20
WDM 22
In-line amplifier 54, 57
InputPort 50
Inter-system connectivity resilience 23
Inventory adapter 11
Inventory adapters 17

L

Logical object classes 33
LogicalConnection 29, 33, 34, 36, 42
LogicalConnectionProtectionTPGroup 36
LogicalConnectionTPGroup 30
LogicalLink 50
Low-order and high-order domain separation 38
Low-order Circuit
Notifications generated 78
LowOrder_Circuit 39, 41, 43
LowOrder_Circuit LayeredOver other entities 42
LowOrderPTP 43

M

Managed device 24
Managed elements 70, 78
Manager
Service Assurance (Global Manager) 18
SONET/SDH 19
WDM 21
MeshSubnetworkConnection 29, 33, 34
Model 15, 16
Connection object 35, 42
Multiplexer 52, 57
MuxInOchPort 49
MuxInOmsPort 49, 52
MuxOutOmsPort 49, 52

N

Network configurations
SONET/SDH 19
WDM 21
Network path 36, 43

Notification log 19
Notifications 28, 70, 78, 84
    WDM 84

O

Object classes 28, 38
Object model 29, 38, 48
OC192_Receive Transponder_NEC64
    Notifications generated 84
OC192_Transmit Transponder_NEC64
    Notifications generated 84
OCH
    See Optical Channel (OCH) 46
OchLink 50, 58, 59
OcnLink 50, 58, 59
Optical Channel (OCH) 46, 55, 56, 57
Optical Channel (OCN) 55, 56, 57
Optical Supervisory Channel (OSC) 47
Optical Transport Manager 14
    SONET/SDH object classes 29
OpticalNetworkElement 29, 38, 39, 48, 50, 51
    Notifications generated 78
OpticalNetworkElement object 30
OSC
    See Optical Supervisory Channel (OSC) 47
OSC Problems 55
OutputPort 50

P

PDH object classes 38
PDH physical object relationships 39
Physical object classes 50
Physical topology 35, 36, 42
Port
    Notifications generated 84
Port Classes 57
Protection
    1:N card 98
    1+1 automatic protection switching 97
    1+1 card 100
    2-Fiber BLSR/MS-SPRing 101
    4-Fiber BLSR/MS-SPRing 103
    UPSR/SNCP 105
Protection scheme 35, 42, 96
PTP 29, 38, 50, 60
    Down 72, 79
    Notifications generated 70, 78, 84, 91
PTP object 30, 31, 40

R

Repository model 28, 38, 46
Resilience
    Inter-system connectivity 23
Reverse amplifier 54
RingProtectionGroup 30
Root-cause analysis 16, 28, 38, 46
    SONET/SDH 19
    WDM 21
Root-cause problems 38
    PDH network 80
    PDH network elements 79
    SONET network 72
    SONET/SDH network elements 71
    WDM network 84, 90
    WDM network connections 85

S

Separation of high-order and low-order domains 38
Service Assurance Manager (Global Manager) 18
SONET/SDH Manager 19
SONET/SDH model 46
SONET/SDH physical object relationships 30
subcard 52
SubNetworkConnection 29
SubnetworkConnection 33, 34
subslot 52
Symptomatic events
    PDH 78
    SONET/SDH 70
    WDM 84

T

Terminal End Amplifier schematic 46
TopologicalLink 29, 30, 31, 32, 40, 50, 58, 60
    Down 72, 80
    Notifications generated 70
    SignalDegrade 73
TopologicalLinkGroup 30, 32, 36, 40, 43
Topology
    Physical 35, 42
    Viewing 24
Topology browser 18
Transponder 49, 55
    Notifications generated 84
Transponder Module
    Notifications generated 84
TransponderInFecPort 49
TransponderInOchPort 49
TransponderInOcnPort 49
TransponderOutOchPort 49
    Notifications generated 84
TransponderOutOcnPort 49
    Notifications generated 84

U

UPSR/SNCP protection 105

W

WDM domain 61
WDM Impact analysis 85
WDM Manager 21
WDM model 46
WDM Receive End Terminal 47

X

XD Manager for OTM to IP 8, 11

Z

Z-end 35, 114, 118